User Manual

ECO-DC

Indoor Digital Clock

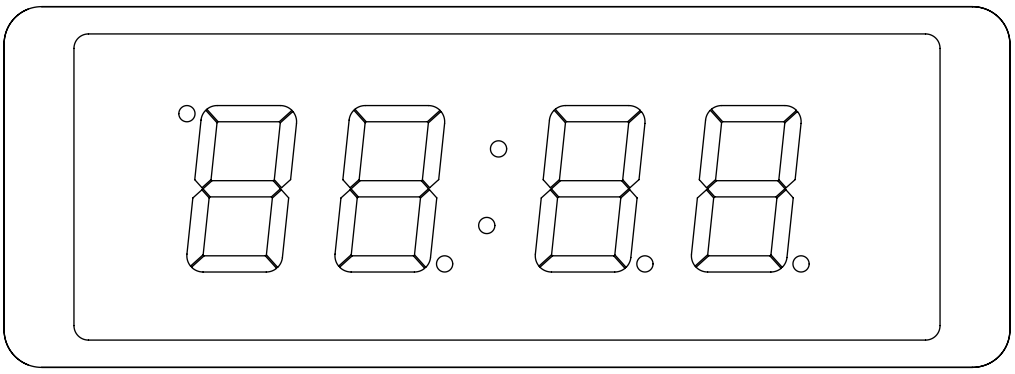

Scan the QR code or enter following URL to get the latest version:
https://docs.mobatime.cloud/ECO-DC

BE-801410.15 | 2026-10-08

Regulations and Certification

The device fulfils the requirements of the following standards:

Eletrical safety :	EN 62368-1 ED.2
EMC :	EN 55032 ED.2; EN 55035; EN 50121-4 ED.4

This product was developed and produced with the following EU directives:

EMC :	Electromagnetic compatibility directive **2014/30/EU**
LVD :	Low voltage directive **2014/35/EU**
RED :	Radio equipment directive **2014/53/EU**
RoHS II :	Restriction of the use of certain hazardous substances directive **2011/65/EU**
WEEE :	Waste electrical and electronic equipment directive **2012/19/EU**
REACH :	Chemical substance directive **ES 1907/2006**

See Conformity for the declaration of conformity of this specific product. This produst may offer a CB test certificate on request.

Important Notes

1. Please read and follow the safety information in this document before operating the product. We cannot guarantee that no accidents or damage will occur to improper use of this product. Please use this product with care and operate at your own risk.
2. We are not liable for any direct or indirect damage caused by the use of this document or the said product.
3. This product must be connected and installed by qualified electrician who is familiar with the relevant regulations (e.g. VDE).
4. The information in this document is subject to change without notice. The latest version of this document is available for download at https://docs.mobatime.cloud/ECO-DC/user-manual/pdf .
5. The product firmware is continuously being optimized and supplemented with new options. The latest firmware is available for download at https://docs.mobatime.cloud/ECO-DC/firmware/ .
6. This User Manual has been composed with the utmost care to explain all the details to ensure a safe and stable operation of this product. Nevertheless, if question arise or error appear, feel free to contact support.
7. No part of this document or the said product may be reproduced in any form or by any means or used to make any derivative such as translation, transformation, or adaption without permission from ELEKON, s.r.o., Brněnská 364/17, Vyškov 682 01 / CZECH REPUBLIC.
8. Copyright © 2026 ELEKON, s.r.o., Brněnská 364/17, Vyškov 682 01 / CZECH REPUBLIC. All rights reserved.

Table of Contents

1. Safety ... 8

1.1. Instructions and Symbols ... 8

1.2. General ... 8

1.3. Installation ... 9

1.4. Operation ... 9

1.5. Maintenance and Cleaning ... 10

1.6. Disposing ... 10

1.7. Warranty ... 10

2. Mounting ... 12

2.1. Single Sided ... 12

2.2. Double Sided ... 14

2.3. Cable Connection ... 18

3. Clock Operation ... 23

3.1. Non-network Clock Operation ... 23

3.2. Network Clock Operation ... 27

4. Settings ... 37

4.1. Control ... 37

4.2. Navigation scheme ... 38

4.3. Web Interface ... 42

5. Display Settings ... 52

5.1. Display Brightness ... 52

5.2. Timezone of Time and Date ... 53

5.3. Time Constants for Automatic Data Switching Over ... 54

5.4. 12-Hour Format ... 55

5.5. Time with Leading Zero ... 56

5.6. Date with Leading Zero ... 56

5.7. Clock Address for IR Remote Controller ... 57

5.8. IR Remote Controller Auto-Lock ... 57

5.9. Remote Control Lock ... 58

6. Synchronization Settings ... 60

6.1. Timezone of Synchronization Source ... 60

6.2. Type of Synchronization ... 61

6.3. Master Clock Time Zones ... 61

6.4. Timeout for Indication of State without Synchronization ... 63

6.5. Offset of Displayed Time ... 63

7. Network Settings ... 65

7.1. IP Mode ... 66

7.2. Communication Mode ... 66

7.3. DHCPv4 Mode ... 67
7.4. IP Address ... 67
7.5. Subnet Mask ... 68
7.6. Default Gateway ... 69
7.7. Multicast Address ... 69
7.8. Unicast NTP Address ... 70
7.9. NTP Polling Interval ... 71
7.10. Address Autoconfiguration (SLAAC) ... 71
7.11. DHCPv6 Mode ... 72
7.12. WiFi Mode ... 72
7.13. Multicast Mode for Configuration of Digital Clock ... 73
7.14. SNMP Protocol ... 73
7.15. Web Server ... 74
7.16. Web Server Security Mode ... 74
7.17. Link Local Address ... 75
7.18. Autoconfiguration SLAAC ... 76
7.19. First Address from DHCPv6 ... 76
7.20. Manually Set IPv6 Address ... 77
7.21. Prefix for Manually Set IPv6 Address ... 78
7.22. Gateway from Autoconfiguration SLAAC ... 79
7.23. MAC Address ... 80

8. Sensor Settings ... 82
8.1. Sensor Type ... 83
8.2. Input Number for Sensor One-Wire ... 83
8.3. Temperature Sensor ... 84
8.4. Humidity Sensor ... 86
8.5. Pressure Sensor ... 88
8.6. LAN Sensor ... 90

9. Stopwatch Settings ... 92
9.1. Stopwatch Start Time ... 92
9.2. Stopwatch End Time ... 93
9.3. Counting Direction ... 94
9.4. Control Mode ... 95
9.5. Counting Unit ... 103
9.6. Contact Closing ... 104
9.7. External Keyboard Connection ... 104
9.8. Timeout to Switch to Default Display for BRB ... 105
9.9. BRB10 Connection ... 105
9.10. Stopwatch Start Time (2nd Input) ... 106
9.11. External Button Input Active Level ... 107
9.12. Display Blink ... 108
9.13. Code Blue ... 109

10. Time & Date Settings ... 111
10.1. Time ... 111

10.2. Date and Year ... 111

11. Power modes ... 113

11.1. Power OFF ... 113

11.2. Power SAVE ... 114

12. Share Mode ... 118

12.1. UDP Port Setting ... 119

12.2. Sharing Display Mode (Default Display, Stopwatch) ... 119

12.3. Sharing Stopwatch ... 120

12.4. Sharing Relay ... 120

12.5. Sharing Display Brightness ... 121

12.6. Sharing Screen ... 121

12.7. Sharing Sensor 1 ... 122

12.8. Sharing Sensor 2 ... 122

12.9. Local Stopwatch Setting ... 123

12.10. Examples of Share Mode Settings ... 123

13. System Settings ... 126

13.1. Diagnostic tools ... 126

13.2. Factory Reset ... 131

13.3. Firmware Update via USB Process Settings ... 131

13.4. Clock Address for IR Remote Controller ... 132

13.5. IR Remote Controller Auto-Lock ... 133

13.6. Remote Control Lock ... 134

13.7. Display Brightness Derating ... 135

13.8. Light Sensor Correction ... 135

13.9. Individual Digit Brightness Setting ... 136

13.10. Individual Dot Brightness Setting ... 137

14. Local time calculation ... 140

14.1. According to Synchronization Source ... 140

14.2. According to MOBALine Timezones ... 140

14.3. According to MOBA-NMS Preconfigured Timezones ... 140

14.4. According to Server MOBATIME ... 141

14.5. According to Internal Timezone Table ... 141

15. Timezones Table ... 142

16. Factory Reset to Default Values ... 145

16.1. Factory Reset Using Menu ... 145

16.2. Factory Reset via Web Interface ... 145

16.3. Factory Reset Using Push-Buttons ... 145

17. Firmware update ... 147

17.1. Firmware update via MOBA-NMS ... 147

17.2. Firmware update via SNMP ... 147

17.3. Firmware update via web server ... 147

17.4. Firmware update via USB 148

18. Clock specifications 150

18.1. Basic Data 150

18.2. Diagram & Dimensions 151

18.3. VDC Option Voltage Table 153

18.4. VDISP Option Voltage Table 154

18.5. LINES Input Voltage Range for Control Signals 155

19. Frequently asked questions 156

19.1. General Questions 156

19.2. Local Time Calculation Questions 156

1 Safety

Read the safety instructions carefully and follow all the instructions. This ensures safe and reliable operation of this device.

1.1. Instructions and Symbols

Symbols used throughout this document and their meaning are as follows:

A note or important information.

Answer to a possible question. Contact information.

Keep away from children and people with limited physical, sensory, or mental capacities.

Action needs to be taken.

Connect device to earth ground.

More information included in the manual. It also indicates navigation in the clock menu.

Disconnect mains power before doing anything.

An example or a hint.

Additional references or information.

Attention of electrical shocks.

Surface may be hot.

Item is flammable.

A warning, be cautious.

Recyclable materials.

Do not put in trash.

1.2. General

For safety and licensing reasons, unauthorized modifications and/or changes to the product is prohibited. Maintenance, adjustments or repairs may only be carried out by the factory (copyright holder).

This product is not a toy; it does not belong in the hands of children. Mount or place the product so that it cannot be reached by children. Children may try to insert objects into the product. The product will not only be damaged, but there is also a risk of injury, as well as danger to life through electric shock.

Never open the housing of this product, for it poses mortal danger from electric shock or may even cause a fire.

Keep packaging such as plastic films away from children. There is the risk of suffocation of misused.

Use caution with the product, knocks, blows, or even falls from a low height can damage it.

In industrial facilities, the accident prevention regulations of the trade associations for electrical systems and equipment must be observed.

Do not use the product if it is damaged. It can be assumed that safe operation is no longer possible, if:

- The product has visible damage.
- The product is not working properly (thick smoke or a burning smell, audible crackling noise, discoloration of the product or surrounding areas).
- The product was stored under adverse conditions.
- Tough conditions during transport.

Improper handling of this product operated on the mains voltage can cause mortal danger from electric shock!

Interconnection or combining equipment bearing a CE label does not inevitably result in a system that conforms with the safety regulations. Integrators will have to reassess the new product's compliance according to the locally valid directives. See section Conformity for more information on certifications of this product.

1.3. Installation

This product must be connected and installed by a qualified electrician who is familiar with the relevant regulations (e.g. VDE).

Never plug the product into voltage / power supply immediately after it has been moved from cold into warm environment (e.g. during / after transport / unboxing). The resultant condensed water may damage the product or may cause electric shock.

Allow the product reach the ambient temperature. Wait until the condensation has evaporated, this can take a few hours. Only then can the product be connected to the voltage / current supply and put into operation.

This product may have screw terminals with open electrical contacts. It is essential to ensure that the connection is made only when no voltage / current is applied. Secure the power supply to prevent accidental reconnection. Verify the absence of voltage using an appropriate meter.

The power supply line must be protected with a residual current circuit breaker (RCCB) with a trip current ≤ 30 mA.

Always connect earth ground to the device at the indicated protective earth terminal (PE or earth symbol indication).

Always unplug a power plug from the socket only at the intended gripping surface, pull the power plug not the cord from a power outlet. Wires may rip out and pose danger to life though electric shock.

Maintain sufficient cooling of the product according to its specifications.

1.4. Operation

Use the product in the specified environment. Use outside of the specifications can damage the product and/or stop any operation.

The product may not be exposed to extreme temperatures, direct sunlight or strong vibrations. Protect the product from moisture, dust and dirt.

Operation in environments with excessive dust, flammable gases, vapours or solvents is not permitted. It may cause explosion or fire.

Depending on the cooling type, the product housing may reach temperatures above 60 °C, which can burn the skin.

- Do not overload the product. Note the input / output voltage and currents as well as output powers indicated on the product.
- Depending on the input currents and input voltages, suitable connecting cables with appropriate cable diameter must be used. Only use the plugs and connectors supplied in the original packaging with the product.

1.5. Maintenance and Cleaning

- If the product and/or the connecting cable is damaged, do not touch it: there is mortal danger from electric shock! First, turn off the power supply to all poles of the product (turn off assocciated circuit breaker or remove the fuse, then turn off GFCI). Verify the absence of voltage using an appropriate meter.
- For the end consumer, the product is maintenance-free. Leavy any maintenance to an expert. Repairs may only be done by the factory itself (copyright holder).
- For external cleaning one can use a clean, soft, dry cloth. Dust can be easily removed with a clean, soft brush and a vacuum cleaner.

Unplug all poles of the product from the operating voltage before cleaning.

- Do not use aggressive chemicals or abrasive cleaners, as this may cause discoloration or even material changes.
- This product is equipped with fuses for protection against high voltage and high currents. Burned fuses may only be replaced by the factory itself (copyright owner).

Never bridge a fuse, it is a fire hazard and can cause a fatal electric shock.

1.6. Disposing

At the end of its lifecycle, do not dispose of this device in the regular household rubbish. Return it to the supplier who will dispose of it correctly.

The user is lawfully obligated to return unusable batteries. **Disposal of used batteries through household waste is prohibited!** Batteries which contain dangerous substances are labelled with a picture of crossed out trash bin. The symbol means that this product may not be disposed through household waste.

Unusable batteries can be returned free of charge at appropriate collection points of your waste disposal company or at shops that sell batteries. By doing so, you fulfil your legal responsibilities and help protect the environment.

This product was packed and stuffed with proper materials to protect it during transportation. Packaging materials can be recycled and should be disposed environmentally friendly.

1.7. Warranty

The device is intended for a normal operational environment according to the corresponding norm.

The following circumstances are excluded from the warranty:

- Inappropriate handling or interventions.
- Chemical influences.
- Mechanical defects.
- External environmental influences (natural catastrophes, etc.)

Repairs during and after warranty period are assured by the manufacturer.

2 Mounting

2.1. Single Sided

2.1.1. Wall Mounting

Step 1

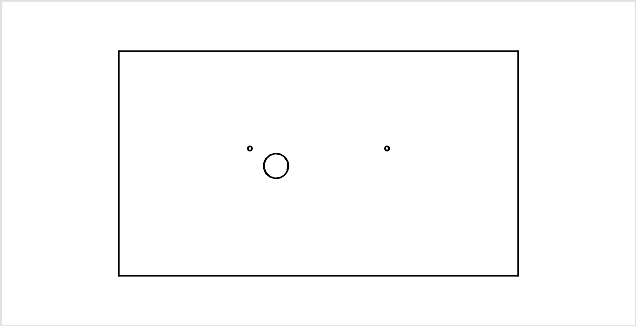

- Drill two anchoring holes into the wall of a diameter adequate to accommodate supplied wood-type screws with dowels.

See chapter Diagram & Dimensions for hole spacing.

Step 2

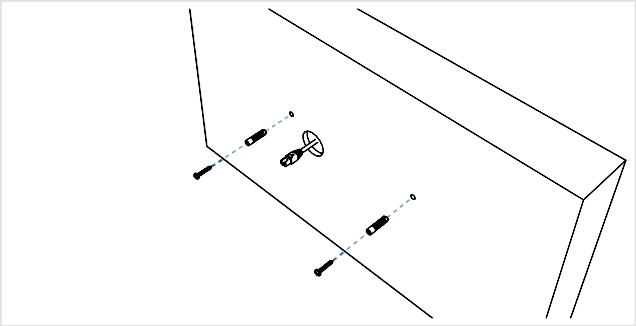

- Insert the dowels into the prepared holes and screw in the screws, leaving the screw heads at least 3 mm proud of the wall.

Step 3

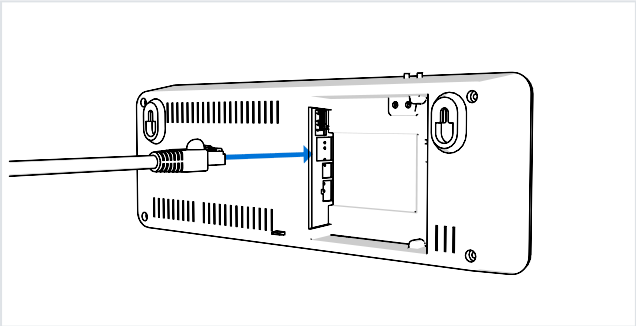

See chapter Cable Connection .

- Shape or shorten the conductors so that their routing does not obstruct proper positioning and securing of the clock.
- **For mains-powered clocks** , mount a wide 2-pin plug-in terminal to a incoming power conductors and plug it into a corresponding terminal in the back side recess.
- **For PoE powered clocks** , connect a PoE-enabled Ethernet cable to the RJ-45 connector in the back side recess.

Step 4

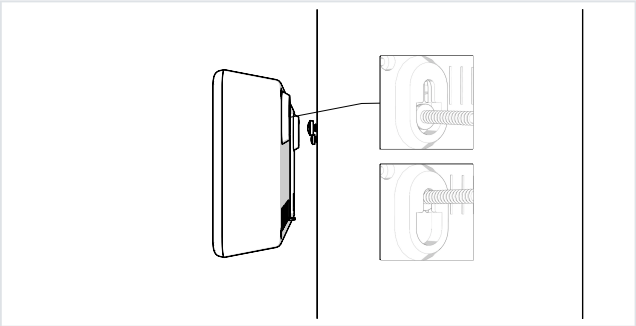

- Hang the clock on the prepared screws in the wall.

If the clock has to be tilted down slightly, cut the supporting element on bottom of back side accordingly.

Use a PoE switch port or PoE injector that provides the required PoE power.

- Mount an appropriate plug-in terminals to the wires of the respective component (e.g., temperature sensor, keyboard, or RS-485 interface) and plug them into the corresponding terminal in the back side recess.

  Connect the Ethernet cable to the RJ-45 connector, if available.

Be careful not to swap the terminals. Check the markings of the terminals on the labels in the back side recess.

For the LGC variant, set the DIP switch according to the used synchronization signal (its position can be found in the chapter, marked with the letter B).

For lines synchronization, keep the DIP switch in its **default position** .

For all other synchronization signals (DCF, MOBALine, polarized impulse line, IRIG-B), set the DIP switch to the **DCF position** .

See the chapter Clock Operation > Non-network Clock Operation for detailed information about connecting the various synchronization sources and receivers.

2.1.2. Ceiling Suspension Mounting

Step 1

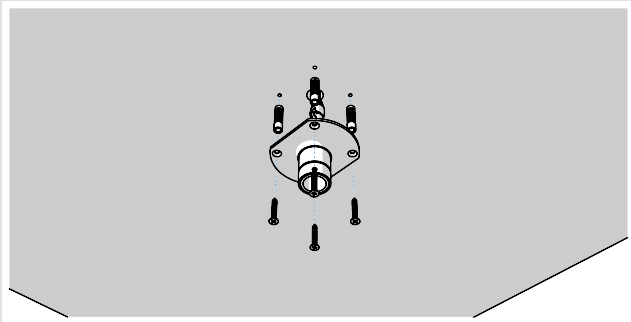

- Drill four anchoring holes into a ceiling of a diameter adequate to accommodate supplied wood-type screws with dowels.
- Interlace incoming cables through suspension pipe. Fasten the ceiling suspension to ceiling using 4 wood-type screws of 5 mm diameter.

Step 2

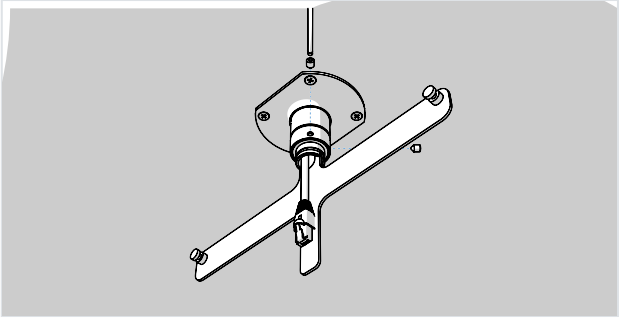

- Interlace incoming cables through pipe insert on anchoring plate.
- Slip-on the plate onto suspension.
- Fix the connection by tightening the screws using Allen key No. 3.

The screws must fit into the upper groove on the pipe insert; otherwise, it will not be possible to mount a display part onto the anchoring plate.

After mounting the display part, it is possible to elevate the clock by securing the anchoring plate in a manner where the screws fit into the lower groove on the pipe insert.

Step 3

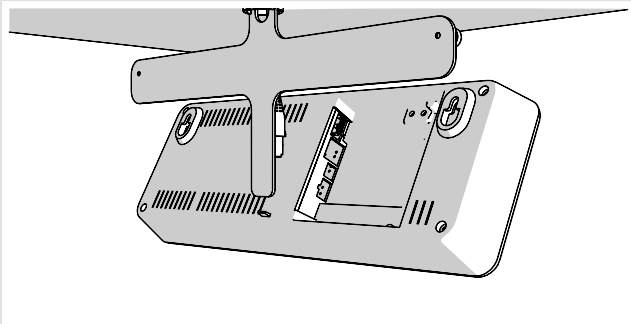

See chapter Cable Connection .

- Shape or shorten the conductors so that their routing does not obstruct proper positioning and securing of the clock.
- **For mains-powered clocks** , mount a wide 2-pin plug-in terminal to a incoming power conductors and plug it into a corresponding terminal in the back side recess.
- **For PoE powered clocks** , connect a PoE-enabled Ethernet cable to the RJ-45 connector in the back side recess.

  Use a PoE switch port or PoE injector that provides the required PoE power.
- Mount an appropriate plug-in terminals to the wires of the respective component (e.g., temperature sensor, keyboard,

Step 4

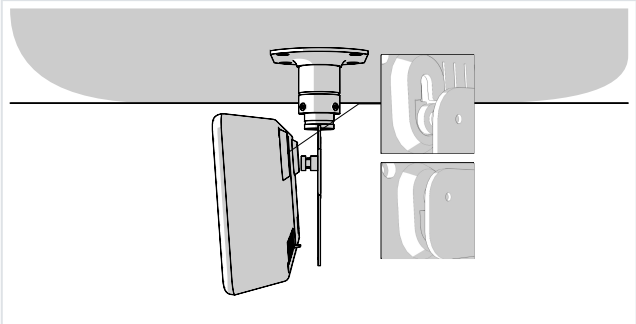

- Hang the clock onto the anchoring plate.

If the clock has to be tilted down slightly, cut the supporting element on bottom of back side accordingly.

or RS-485 interface) and plug them into the corresponding terminal in the back side recess.

Connect the Ethernet cable to the RJ-45 connector, if available.

Be careful not to swap the terminals. Check the markings of the terminals on the labels in the back side recess.

For the LGC variant, set the DIP switch according to the used synchronization signal (its position can be found in the chapter, marked with the letter B).

For lines synchronization, keep the DIP switch in its **default position** .

For all other synchronization signals (DCF, MOBALine, polarized impulse line, IRIG-B), set the DIP switch to the **DCF position** .

See the chapter Clock Operation > Non-network Clock Operation for detailed information about connecting the various synchronization sources and receivers.

2.2. Double Sided

The double sided clock consists of two parts, one serving as the control module (this one encompasses the terminals to connect powering voltage, synchronization source, the temperature sensor and the keyboard to the clock) – “MASTER display”, and the other one serving as the display module (with the terminal for the connection of the interconnecting cable) – “SLAVE display”. Both clock parts are interconnected via a 10-core flat cable. The clock suspension part is delivered separately.

2.2.1. Ceiling Suspension Mounting

Step 1

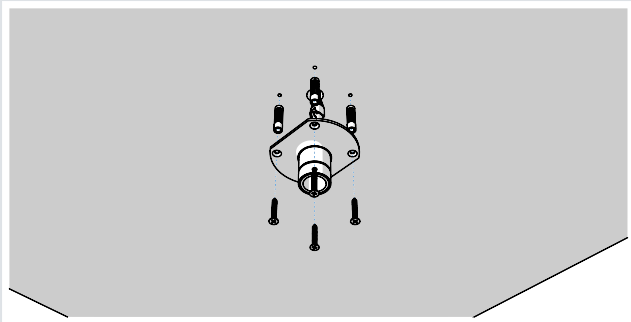

- Drill four anchoring holes into a ceiling of a diameter adequate to accommodate supplied wood-type screws with dowels.
- Interlace incoming cables through suspension pipe. Fasten the ceiling suspension to ceiling using 4 wood-type screws of 5 mm diameter.

Step 2

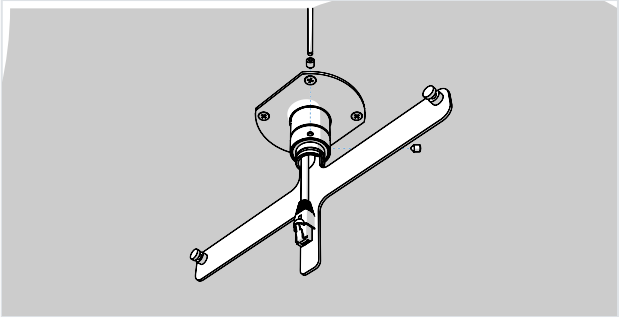

- Interlace incoming cables through pipe insert on anchoring plate.
- Slip-on the plate onto suspension.
- Fix the connection by tightening the screws using Allen key No. 3.

The screws must fit into the upper groove on the pipe insert; otherwise, it will not be possible to mount a display part onto the anchoring plate.

After mounting the display part, it is possible to elevate the clock by securing the anchoring plate in a manner where the screws fit into the lower groove on the pipe insert.

Step 3

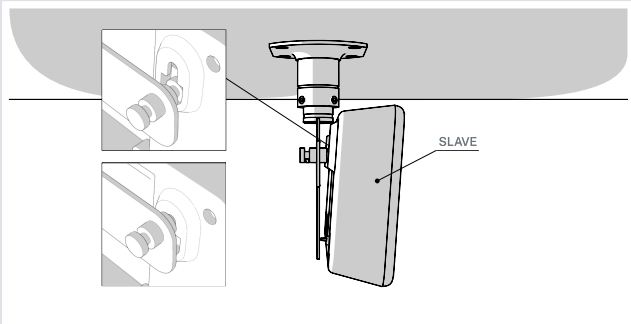

- Hang the SLAVE display onto the anchoring plate.

If the clock has to be tilted down slightly, cut the supporting element on bottom of back side accordingly.

Step 4

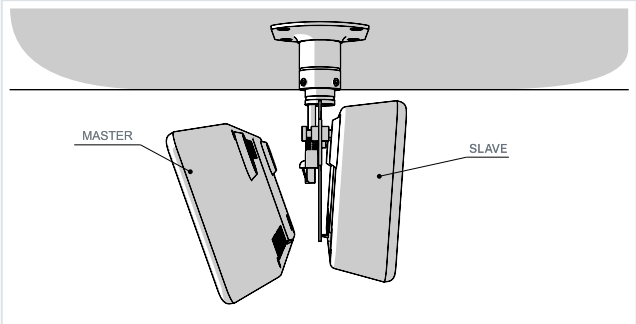

See chapter Cable Connection .

Connect all cables and conductors to MASTER display.

- Shape or shorten the conductors so that their routing does not obstruct proper positioning and securing of the clock.
- **For mains-powered clocks** , mount a wide 2-pin plug-in terminal to a incoming power conductors and plug it into a corresponding terminal in the back side recess.
- **For PoE powered clocks** , connect a PoE-enabled Ethernet cable to the RJ-45 connector in the back side recess.

Use a PoE switch port or PoE injector that provides the required PoE power.

- Mount an appropriate plug-in terminals to the wires of the respective component (e.g., temperature sensor, keyboard, or RS-485 interface) and plug them into the corresponding terminal in the back side recess.

  Connect the Ethernet cable to the RJ-45 connector, if available.

  Be careful not to swap the terminals. Check the markings of the terminals on the labels in the back side recess.

- Connect the 10-core interconnecting cable from SLAVE display to MASTER display.

  For the LGC variant, set the DIP switch according to the used synchronization signal (its position can be found in the chapter, marked with the letter B).

  For lines synchronization, keep the DIP switch in its **default position** .

  For all other synchronization signals (DCF, MOBALine, polarized impulse line, IRIG-B), set the DIP switch to the **DCF position** .

  See the chapter Clock Operation > Non-network Clock Operation for detailed information about connecting the various synchronization sources and receivers.

Step 5

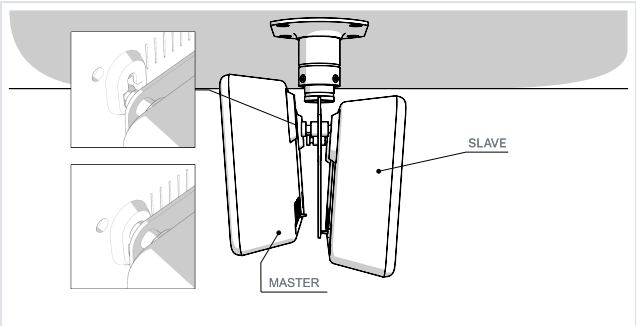

- Hang the MASTER display onto the anchoring plate.

If the clock has to be tilted down slightly, cut the supporting element on bottom of back side accordingly.

2.3. Cable Connection

2.3.1. Control Elements

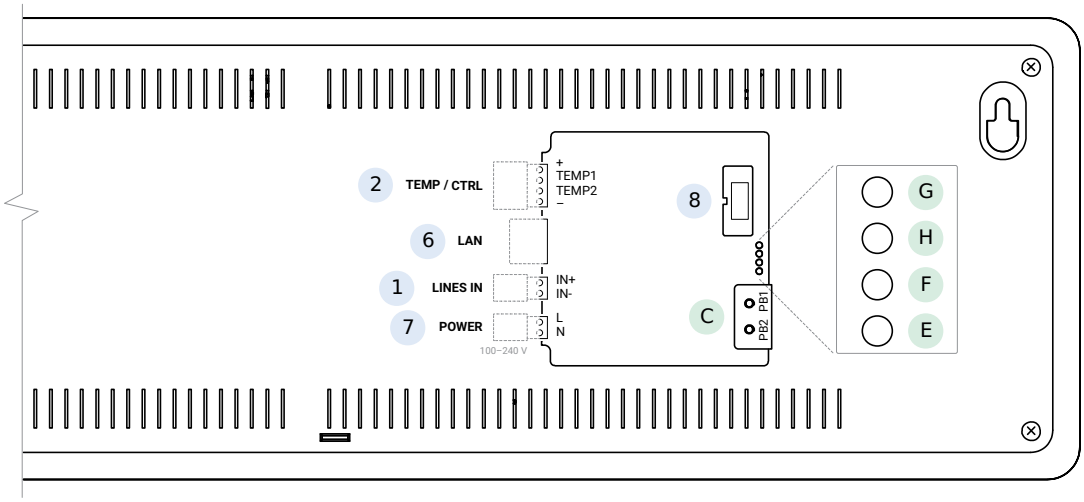

Description

1 LINES IN connector (for LGC)

2 TEMP / CTRL connector

6 LAN connector (only for PoE and NTP)

7 100–240 VAC (except PoE)

8 DISP2 – connection for second side of the clock

A Push-buttons PB1, PB2

Push-buttons location depend on digit height. For ECO-DC.57 model, push-buttons are located on the upper side of the recess.

B DIP switch (only for LGC variant)

DIP switch is accessible after removing the front frame and plexiglass.

E Powering LED indication

F State LED

G Link LED

H Activity LED

2.3.1.1. Dismounting the Front Plexiglass

For the LGC variant, the front plexiglass cover is disassembled either to switch the input for the DCF/GPS receiver, or to perform a factory reset using the button (see Factory Reset Using Push-Buttons chapter).

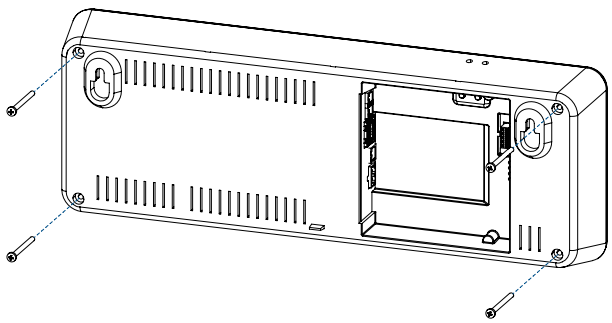

Step 1 – Remove four screws from the back side of the frame.

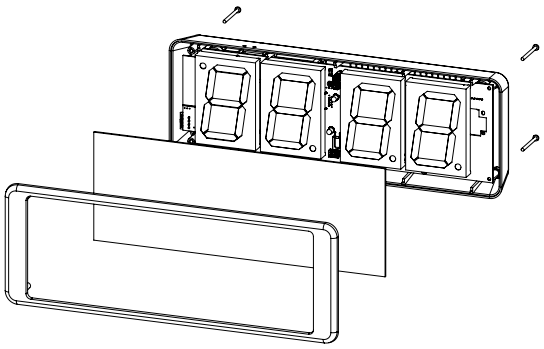

Step 2 – Remove the front frame and the plexiglass.

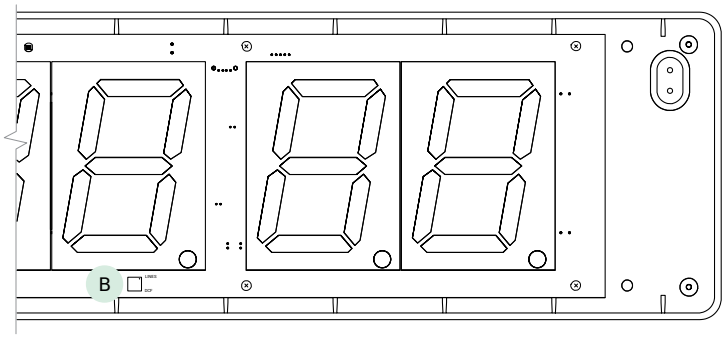

2.3.2. Wires Connection

LINES IN Wire Connection

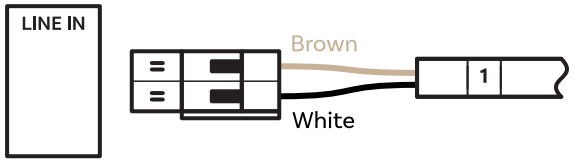

TEMP Wire Connection

One or two temperature sensors

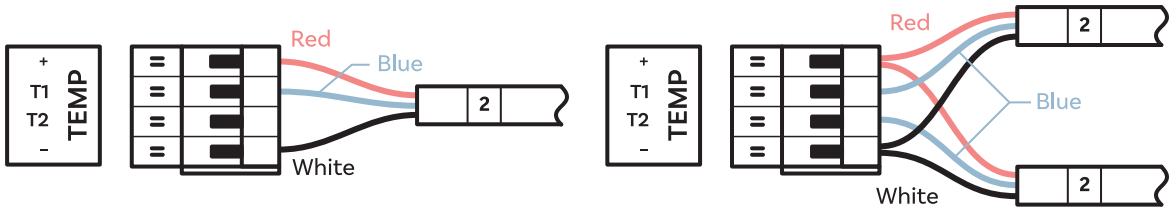

CTRL Wire Connection

Stopwatch control connects to TEMP connector

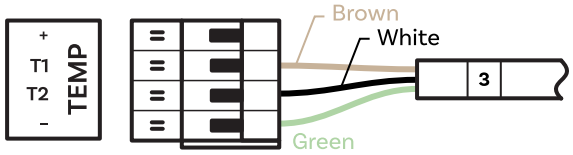

POWER Wire Connection

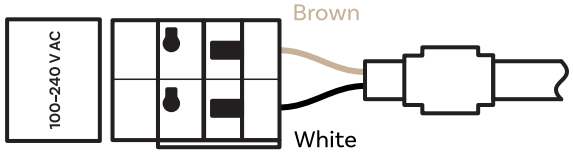

VDC or RP Option Wire Connection

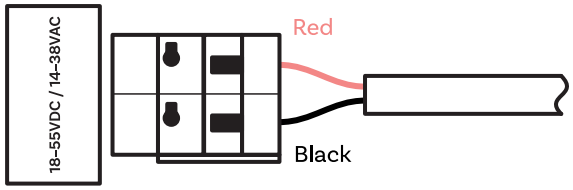

2.3.2.1. VDISP Option Wire Connection

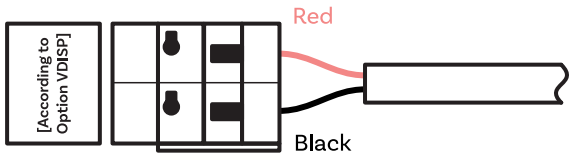

3 Clock Operation

These chapters give you detailed description of different clock operation modes.

- **Non-Network Clock Operation**
  For digital clock synchronized by LGC or GPS variant.
- **Network Clock Operation**
  For digital clock synchronized by NTP, PoE, PoE+, WiFi or WiFi5 variant.

3.1. Non-network Clock Operation

Depending on the synchronization source, it is necessary to configure the DIP switch on clock PCB – either to the DCF position or to the LINES position (default setting). The position of DIP switch is shown under letter B on PCB diagrams.

For ECO-DC digital clocks, the DIP switch for LINES x DCF input switching is accessible by removing the plexiglass and front frame (click here to view ECO-DC control elements).

The correct position of the DIP switch must be set before connecting the line wiring to the LINES connector or before starting the synchronization line.

Enter the SYNC menu item o2 (Type of Synchronization) and set the desired type. The Auto-Detection Mode (o2: A) is applicable for DCF signal, MOBATIME serial code, IRIG-B.
The permanently lit colon during the time display signalizes the clock is synchronized by the synchronization source.

3.1.1. DCF 77 Receiver

1. Configure the DIP switch to DCF positon.

   To configure DIP switch position, you need to dismount the front plexiglass. See Cable Connection chapter.

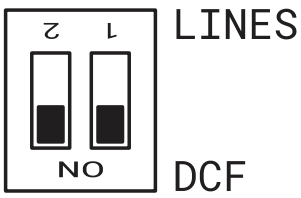

   It is important to switch both positions to ON (DCF).

2. Set following items:
   - In the SYNC menu, set item o1 to value A (see Timezone of Synchronization Source chapter)
   - In the SYNC menu, set item o2 to value A (see Type of Synchronization chapter)
   - In the dISP menu, set item d2 to value A (see Timezone of Time and Date chapter)

3. Connect the DCF 77 receiver to LINES IN connector on back side of the recess.

Connect one pin (LINES+ or LINES-) to the PE conductor (only valid for connecting the DCF antenna AD 650).

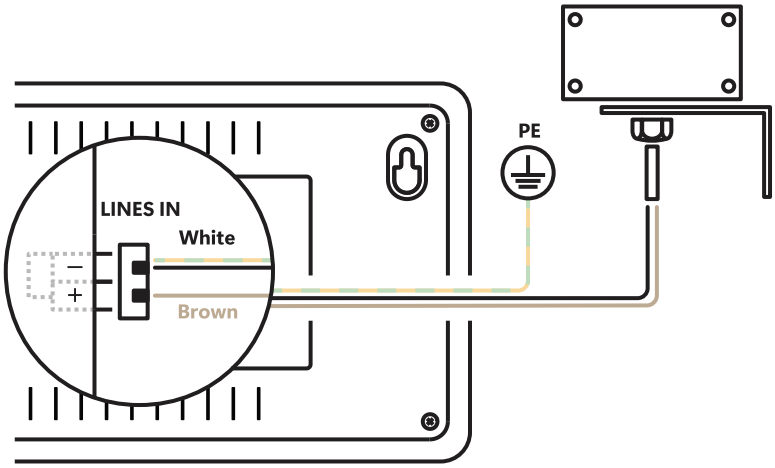

4. The maximum wire length depends on its diameter (approx. 100–300 m at 0.25 mm ^{2}).
5. In case the connection is correct and the input signal is at high level, the LED on the receiver is flashing periodically once a second with one pulse left out at the 59th second.

If the polarity is incorrect, the LED does not flash. In such case, interchange the two wires.

6. Install the receiver at a place with a high-level radio signal. Do not install the receiver near sources of interfering signals, such as personal computers, TV sets or other types of power consumers (the digital clock itself generates interfering signals too).
7. Position the receiver with its transparent cover (DCF 450) or the arrow on the cover (DCF 4500) facing the transmitter (located in Frankfurt, Germany). Presuming the good quality DCF 77 signal the synchronization takes place in approx. 3 to 4 minutes. In case of poor quality of the signal (mainly during the day time), the first time setting is to be done manually. The red LED of the receiver displays a working connection by flashing once a second without flickering.

3.1.2. GPS Receiver

1. Set following items:
   - In the SYNC menu, set item o1 to value A (see Timezone of Synchronization Source chapter)
   - In the SYNC menu, set item o2 to value A (see Type of Synchronization chapter)
   - In the dISP menu, set item d2 to your desired time zone (see Timezone of Time and Date chapter)
2. Connect the GPS antenna to SMA connector.

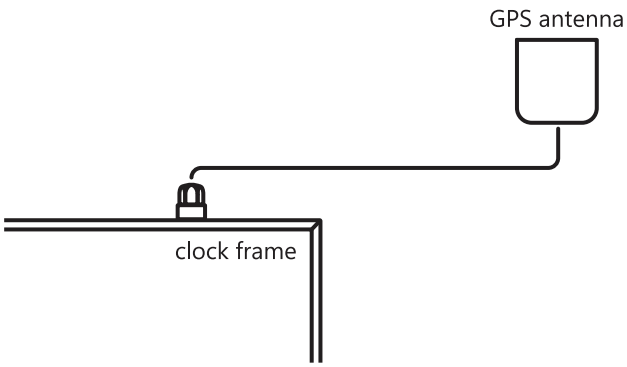

3. Presuming the good position of the GPS receiver the synchronization takes place in approx. 10 to 20 minutes.

3.1.3. GPS Receiver (GNSS 4500)

1. Configure the DIP switch to DCF positon.

To configure DIP switch position, you need to dismount the front plexiglass. See Cable Connection chapter.

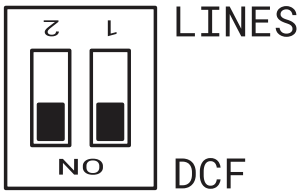

It is important to switch both positions to `ON` (DCF).

2. Set following items:
   - In the SYNC menu, set item o1 to value A (see Timezone of Synchronization Source chapter)
   - In the SYNC menu, set item o2 to value A (see Type of Synchronization chapter)
   - In the dISP menu, set item d2 to your desired time zone (see Timezone of Time and Date chapter)
3. Connect GPS receiver (GNSS 4500) to the **LINES IN** connector on back side of the recess. Connect **yellow** and **green** cable to external power supply.

Please note the correct polarity of the wires – see the GPS user manual.

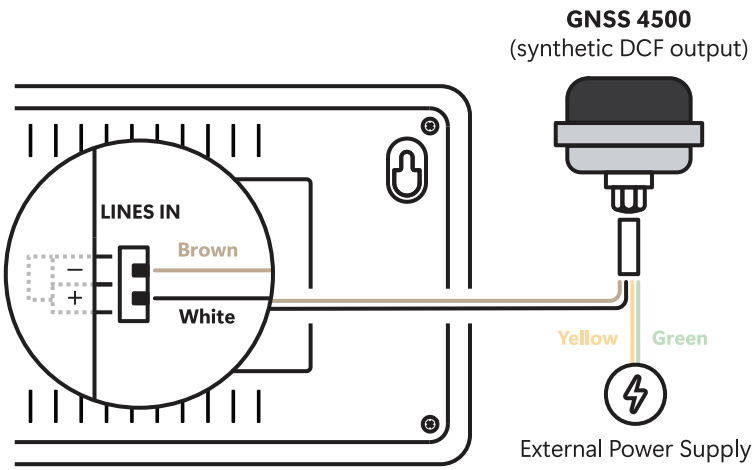

4. For the correct placing of the receiver please follow the GPS user manual.
5. Presuming the good position of the GPS receiver (GNSS 4500) the synchronization takes place in approx. 10 to 20 minutes. The green LED diode lights up.

3.1.4. Synchronizing Impulses

In a time distribution system, where the digital clocks are controlled by polarized impulses, set the SYNC menu item o2 to according type of the impulse line (one minute, half minute, second pulses).

1. Configure the DIP switch to LINES positon (default setting).

   To configure DIP switch position, you need to dismount the front plexiglass. See Cable Connection chapter.

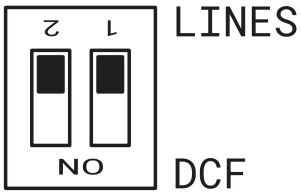

2. Set following items:
   - In the SYNC menu, set item o1 to value A (see Timezone of Synchronization Source chapter)
   - In the SYNC menu, set item o2 to value A (see Type of Synchronization chapter)
   - In the dISP menu, set item d2 to your desired time zone (see Timezone of Time and Date chapter)
3. The clock time-base is synchronized by incoming pulses in normal operation of the slave line.
4. Set current date and time in the tIME menu according to **MASTER** clock with accuracy of ±30 seconds (or ±15 seconds, or ±0.5 second respectively).
5. The colon flashes in 2 second interval.
6. After 2–3 minutes are the clocks synchronized with the **MASTER** clock. The colon is permanently lit during the display of time.
7. In case of the line fault, the clock displays the right time information based on its own quartz time base. When the normal operation of the line resumes, the clock synchronizes with the incoming pulses.

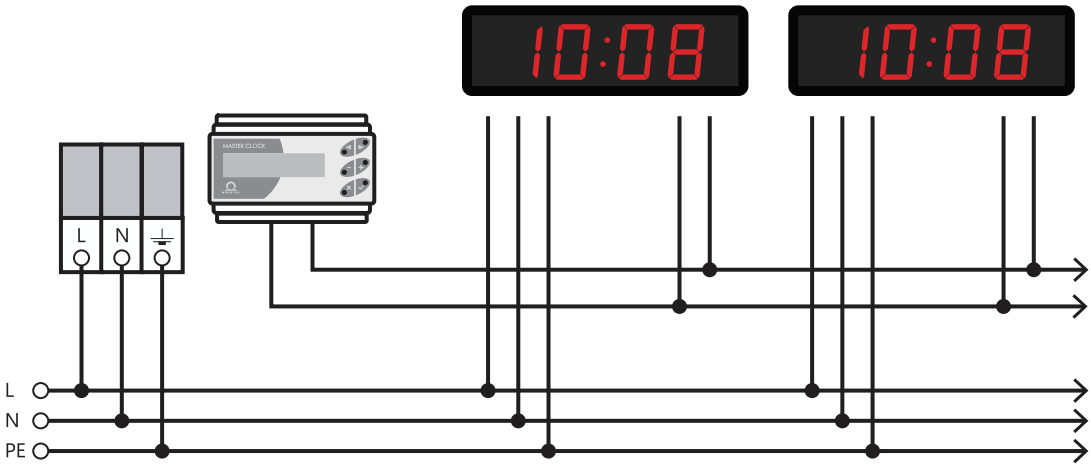

3.1.5. MOBATIME Serial Code, MOBALine or IRIG-B

1. Configure the DIP switch to LINES positon (default setting).

To configure DIP switch position, you need to dismount the front plexiglass. See Cable Connection chapter.

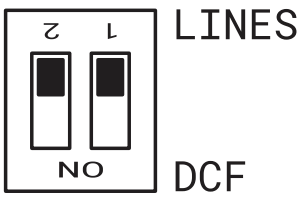

2. After connection of the digital clock to the signal source, time and date are adjusted automatically, following the receipt of valid time information.
3. The time setting with using the serial coded line takes place within at least 5 to 6 minutes, for MOBALine and IRIG-B within 6 to 15 seconds.

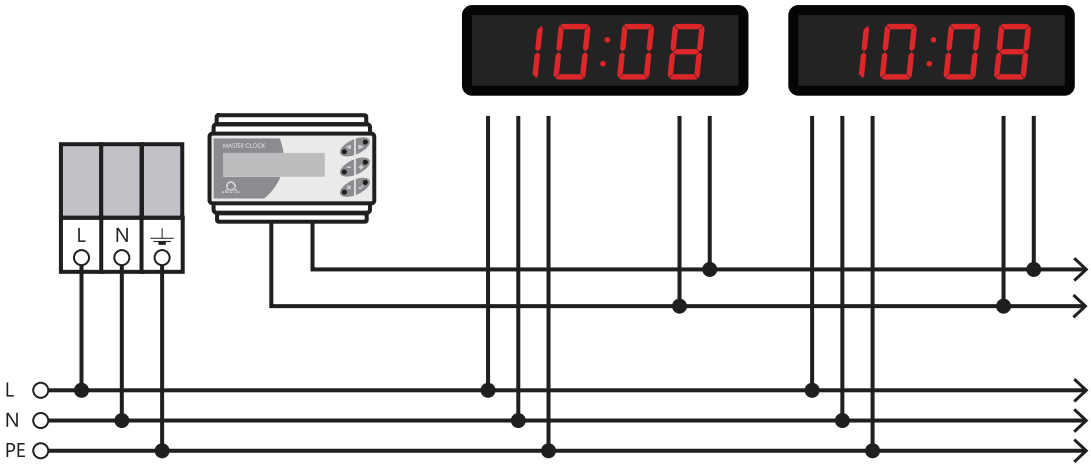

See also LINES Input Voltage Range for Control Signals chapter.

3.2. Network Clock Operation

Clock supports IPv4 and IPv6 protocols. You can disable individual protocols by setting values in IP mode in network settings. Default clock setting allows both protocols at the same time – the NET menu item n1 is set to value 0 (see IP Mode chapter).

For IPv4 mode, DHCPv4 is enabled by default – the NET menu item n3 is set to value 1 (see DHCPv4 Mode chapter).

IPv6 mode allows up to 4 different priority IP addresses in downwards order:

- DHCPv6
- manually configured IP address (fix)
- autoconfiguration (SLAAC / RA)
- local address link

For IPv6 mode, DHCPv6 and autoconfiguration (SLAAC) are enabled by default:

DHCPv6 : NET menu item 11 is set to value 1 (see DHCPv6 Mode chapter)

SLAAC : NET menu item 10 is set to value 1 (see Address Autoconfiguration (SLAAC) chapter)

Default Network Parameters

Parameter	Value(s)
IP Mode	IPv4 / IPv6
IPv4 Address	0.0.0.0
IPv4 Subnet Mask	0.0.0.0
IPv4 Default Gateway	0.0.0.0
NTP Server Address 1	0.0.0.0 / 0:0:0:0:0:0:0:0
NTP Server Address 2	0.0.0.0 / 0:0:0:0:0:0:0:0
NTP Server Address 3	0.0.0.0 / 0:0:0:0:0:0:0:0
NTP Server Address 4	0.0.0.0 / 0:0:0:0:0:0:0:0
NTP Request Time [s]	10
DNS Manager	0.0.0.0 / 0:0:0:0:0:0:0:0
SNMP Manager 1	0.0.0.0 / 0:0:0:0:0:0:0:0
SNMP Manager 2	0.0.0.0 / 0:0:0:0:0:0:0:0
Multicast Config Address	239.192.54.1 / FF38::EFC0:3601 (FF38:239.192.54.1)
Alive Notifications Interval [min]	30
Configuration Port Number	65532
Timezone Client Port Number	65534
DHCPv4	enabled
SNMP	enabled
Multicast Support	enabled
IPv6 Fix Address / Prefix	0:0:0:0:0:0:0:0 / 64
IPv6 Link Local Address	fe80 :: 2 [2 nd octet MAC]: [3 rd octet MAC] ff: fe [4 th octet MAC]: [5 th octet MAC] [6 th octet MAC]

Parameter	Value(s)
DHCPv6	enabled
Autoconfiguration (SLAAC)	enabled
Web Server	enabled
Web Server Password	mobatime

3.2.1. Unicast Mode

The clock is synchronized to UTC (*Coordinated Universal Time*) from NTP server (up to four IPv4 / IPv6 addresses for NTP server configurable) and **must** have assigned its own IPv4 / IPv6 address. The clock requests in defined intervals the actual time from NTP server (interval can be adjusted in the NET menu item n9 (see NTP Polling Interval chapter)). If the server is not available, the clock tries to contact other defined servers in cyclic ways until valid response from NTP server is received.

This operation mode supports monitoring and configuration of movement via network connection by means of **Web Interface** (enabled in the NET menu item 15 (see Web Server chapter)), **SNMP** (enabled in the NET menu item 14 by setting the value to 1 (see SNMP Protocol chapter)) or **MOBA-NMS Software Tool** .

For supervision and configuration with MOBA-NMS, either clock's IPv4 / IPv6 address can be used or multicast group address (the NET menu item n7 (see Multicast Address chapter)) must have last octet cleared to zero (presuming that the multicast is not disabled – NET menu item 13 is **not** set to value 0 (see Multicast Mode for Configuration of Digital Clock chapter)).

It is necessary to set appropriate timezone for correct displaying of local time and date. More details can be found in:

- Local time calculation according to internal timezone table
- Local time calculation using time zone server MOBATIME
- Local time calculation using time zone entries preconfigured by MOBA-NMS software

3.2.2. Multicast Mode

The clock is synchronized to UTC (Coordinated Universal Time) from NTP server. The clock receives NTP multicast packets transmitted by NTP server in specified time cycle. This type of synchronization requires no clock's own IP address and is therefore suitable for easy commissioning of large systems of **SLAVE** clocks. Further this mode supports monitoring and parameter configuration by means of MOBA-NMS software.

For supervision and configuration with MOBA-NMS, either multicast group address can be used or multicast group address having last octet cleared to zero.

It is necessary to set appropriate timezone for correct displaying of local time and date. More details can be found in:

- Local time calculation according to internal timezone table
- Local time calculation using time zone server MOBATIME
- Local time calculation using time zone entries preconfigured by MOBA-NMS software

Default Network Parameters

Parameter	Value(s)
IPv4 Multicast Group Address	239.192.54.1

Parameter	Value(s)
IPv4 Multicast Config Address	239.192.54.0
IPv6 Multicast Group Address	FF38::EFC0:3601 (FF38::239.192.54.1)
IPv6 Multicast Config Address	FE38::EFC0:3600 (FF38::239.192.54.0)
Configuration Port Number	65532
Timezone Client Port Number	65534

The NET menu item n2 must be set to value 1 (see Communication Mode chapter).

3.2.3. Network Parameters Assigned by DHCPv4

IP clock mode must be set to IPv4 mode (can be set in the NET menu item n1 setting the value either to 0 or 1 (see IP Mode chapter).

The NET menu item n3 **must** be set to value 1 (see DHCPv4 Mode chapter). Network parameters are automatically obtained from a DHCPv4 server.

The following DHCP options will be evaluated automatically:

[50] : IP address
[3] : gateway address
[1] : subnet mask
[42] : list of up to four NTP server addresses / time zone address (usually same as NTP server address)
[6] : DNS server
[26] : MTU
[60] : vendor Class ID
[43] or [223] : additional options (refer to document BE-800793)

The network administrator must configure DHCPv4 options accordingly. Assigned parameters can be checked in the NET menu items n4 to n6 .

3.2.4. Manual Settings through Setup Menu

DHCPv4 **must** be disabled – the NET menu item n3 must be set to value 0 (see DHCPv4 Mode chapter).

To manually set all clock network parameters, enter the NET menu and set following items listed in table bellow:

Menu Item	Description
n4	Setting of Clock's IP Address
n5	Setting of Subnet Mask
n6	Setting of Default Gateway
n7	Setting of Multicast Group Address
n8	Setting of Unicast NTP Server Address

3.2.5. Calculation of Link Local Address

fe80 :: 2 [2 nd octet MAC]: [3 rd octet MAC] ff: fe [4 th octet MAC]: [5 th octet MAC] [6 th octet MAC]

MAC:
00: 16 : 91 : 12 : 34 : 56

IPv6:
fe80 :: 2 16 : 91 ff: fe 12 : 34 56

3.2.6. Setting Network Parameters over Autoconfiguration (SLAAC)

IP clock mode **must** be set to IPv6 mode (the NET menu item n 1 is set to value 0 or 2 (see IP Mode chapter)).

The NET menu item 10 **must** be set to value 1 (see Address Autoconfiguration (SLAAC) chapter). Network parameters are automatically retrieved from a DHCPv6 server.

The following SLAAC options can be processed:

[3] :	prefix info
[5] :	MTU
[24] :	route info
[25] :	RDNSS

The network administrator must configure SLAAC options accordingly.

3.2.7. Setting Network Parameters over DHCPv6

IP clock mode **must** be set to IPv6 mode (the NET menu item n 1 is set to value 0 or 2 (see IP Mode chapter)).

The NET menu item 11 **must** be set to value 1 (see DHCPv6 Mode chapter). Network parameters are automatically retrieved from a DHCPv6 server.

The following DHCPv6 options can be processed:

[3] :	Identity Association for Non-temporary Addresses (IA_NA)
[16] :	vendor class
[17] :	vendor options
[23] :	DNS servers
[24] :	DNS domains
[25] :	identify association for prefix delegation
[31] :	SNTP servers

The network administrator must configure DHCPv6 options accordingly.

3.2.8. SNMP

The clock supports SNMP version 1, version 2c and version 3 for reading and setting parameters using SNMP GET and SET commands. Only SNMP v2c is supported for SNMP trap notification.

SNMP support allows the clock to be integrated into the system for monitoring network elements. The clock (SNMP agent) can send alarms or notifications to the SNMP manager. The IP address of the SNMP manager can be set in the clock via DHCP, web interface, SNMP or MOBA-NMS.

The supported SNMP protocol version and other necessary parameters for user authentication and communication encryption can be set in the clock via the web interface, SNMP or MOBA-NMS. The SNMP version can be set in combinations:

- v3, v2c, v1
- v3, v2c
- v3
- v2c, v1

The structure of the supported parameters is defined in the MIB file. You can download the file from: https://docs.mobatime.cloud/ECO-DC/snmp .

In addition, the clock supports the parameters defined by the “system” node in the MIB-2 definition (RFC-1213). Alarm notifications are asynchronous messages and are intended to inform the SNMP manager about the occurrence or disappearance of an alarm. Alive notifications are sent periodically to inform about availability and clock status. The sending interval can be set.

Alarm notifications are asynchronous messages and are intended to inform the SNMP manager about the occurrence or disappearance of an alarm.

3.2.8.1. Default SNMPv2c Community Strings

Type of Community	Default Value
Read Community	romobatime
Read / Write Community	rwmobatime
Notifications (Trap) Community	trapmobatime

3.2.8.2. SNMPv3

SNMPv3 includes user authentication and communication encryption. Security is provided using a Security name, Authentication password, and Privacy password. During authorization, communication can be encrypted using MD5 or SHA (SHA-1), and the actual communication can be encrypted using DES or AES (AES 128). The security level can be configured.

The clock allows you to set up two user profiles with different access rights within SNMPv3. Each user has their own combination of Security name, Authentication password and Privacy password along with the appropriate encryption and access rights, which together form a profile.

Default parameters for SNMPv3 USM Profile 1

Parameter	Value
Security Name	admin
Security Level	authentication, privacy
Authentication Protocol	SHA
Authentication Password	rwmobatime
Privacy Protocol	AES
Privacy Password	rwmobatime
Access Control	read & write

Default Parameters for SNMPv3 USM Profile 2

Parameter	Value
Security Name	user
Security Level	authentication, privacy
Authentication Protocol	SHA
Authentication Password	romobatime
Privacy Protocol	AES
Privacy Password	romobatime
Access Control	read only

3.2.8.3. Web Interface

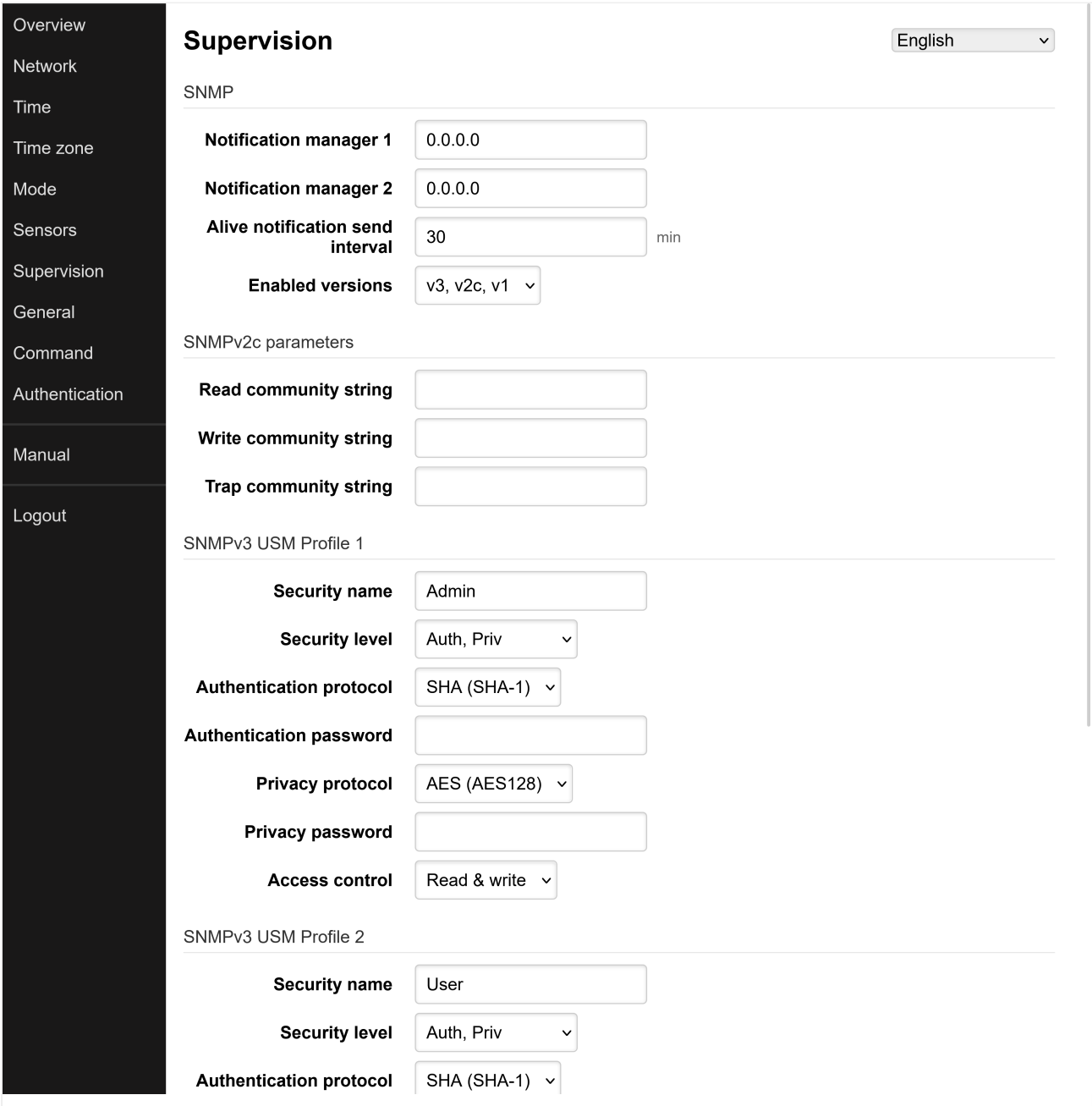

3.2.9. HTTPS

The web interface of the digital clock is accessible from a web browser via HTTP and HTTPS protocols. The clock is supplied with a pre-made certificate for secure communication via HTTPS protocol. The certificate is not backed by a certificate authority, so the web browser will display a warning that the connection is not private. In this case, you need to accept this condition and continue on to the website.

Certificates are provided in the manufacturer process since firmware version r7.15 . In case of firmware update from earlier version, you need to upload SSL certificate by your own.

The default password for the web interface is *mobatime* . The password can be changed via the web interface, MOBA-NMS and SNMP.

You can also use mDNS on your local network. You can use the hostname of the digital clock and use it with the .local extension instead of the IP address. The hostname is composed of the word MOBATIME and the last 3 octets of the MAC address.

MAC address : 00:16:91:12:34:56

↓

Hostname : MOBATIME123456

Enter to address bar : http://mobatime123456.local or https://mobatime123456.local

The web interface mode can be set in the web interface – Supervision tab. Combinations can be set:

- HTTP and HTTPS
- HTTP only
- HTTPS only
- HTTP redirect to HTTPS

User certificates can be uploaded to the clock using the tftp protocol. The certificate files need to be named:

- **key.pem :** private key
- **cert.pem :** certificate
- **ca.pem :** certificate of certification authority

To upload files , use the HTTPS server certificate upload option to select each file type in turn. Press the Apply button to start the upload.

To apply user certificates , under HTTPS server certificate manage, select *Apply user certificates* , and then click **Apply** .

To delete user certificates , set this entry to *Apply factory certificates (delete user certificates)* and confirm with **Apply** . After the clock restarts, the new certificate will be used.

3.2.10. WiFi Operation Modes

Available only for WiFi or WiFi5 variant.

WiFi Operation Modes can be set in the NET menu item 12 (see WiFi Mode chapter).

3.2.10.1. Station Mode (User Defined)

- Connecting to a user-defined WiFi network.
- The WiFi network is defined via MOBA-NMS software tool or Web Interface.

3.2.10.2. Station Mode (MOBA-WIFI)

- Connecting to WiFi with SSID `MOBA-WIFI` .
- Uses WPA2-PSK encryption with default password `hgfedcba` .
- Other network parameters are set according to current settings.

3.2.10.3. AP Mode

- Creates a WiFi AP (Access Point) on 2.4 GHz with SSID `MOBAxxxxxxxxxxxx` where `xxxxxxxxxxxx` is MAC address of specific clock.
- Defaut encryption WPA2-PSK with default password `password` .
- Active internal DHCP server, `192.168.2.0` network with an allocated range of `.100` to `.254` .
- Clock are accessible at static address `192.168.2.1` .

AP mode will disable DHCP on the clock and the clock will operate on static IP address. When switching back to Station mode, manually re-enable DHCP if required or reconfigure static IP address.

- Configuration via web interace only (due to password entry).

4 Settings

These chapters provide instruction and information on how to configure and customize various features and settings of the digital clock. It helps users set up the clock according to their preferences and needs.

4.1. Control

The clock is set and controlled by two push-buttons, stopwatch keyboards or by remote controller. Position of push-buttons depends on the clock type. Push-buttons are mostly located on the upper side of the frame.

4.1.1. Push-buttons

Button	Keyboard Button	Description	Function
PB1	HOLD/RESET	Push-button 1 (short press)	• Moving “up” in menu / submenu • Decreasing of set value
PB1L		Push-button 1 (long press)	• Exit from menu / submenu / set value • Exit without saving
PB2	MENU or DISPLAY MODE	Push-button 2 (short press)	• Moving “down” in menu / submenu • Increasing of set value
PB2L		Push-button 2 (long press)	• Entry into menu submenu / set value • Save and exit
PB3L [1]	START/STOP	Push-button 3 (long press)	• Entry into stopwatch display

Long press is activated if the push-button is pressed for longer than 1 second.

Layout examples:

Stopwatch keyboard SK layout

Stopwatch keyboard SKH layout

4.1.2. Remote Controller Buttons

Button	Function
<<	• Moving “up” in menu / submenu • Exit from stopwatch display into main screens
>>	• Moving “down” in menu / submenu
ESC	• Exit from menu / submenu / set value • Exit without saving
OK	• Entry into menu / submenu / set value • Save and exit
MENU	• Entry into menu from mains screens • Entry into menu from stopwatch display
TIMER	• Entry into stopwatch display from main screens
CLOCK	• Exit from stopwatch display into clock display
DATE	• Exit from stopwatch display into date / calendar week display
TEMP	• Exit from stopwatch display into temperature display
–	• Decreasing of set value
+	• Increasing of set value

1 Available only on stopwatch keyboard accessory.

4.2. Navigation scheme

- Control of the clock using push-buttons placed on the clock is marked in blue frame with blue text .
- Control of the clock using the buttons on remote controller buttons is marked in orange frame with orange text .

4.2.1. Navigation using push-buttons

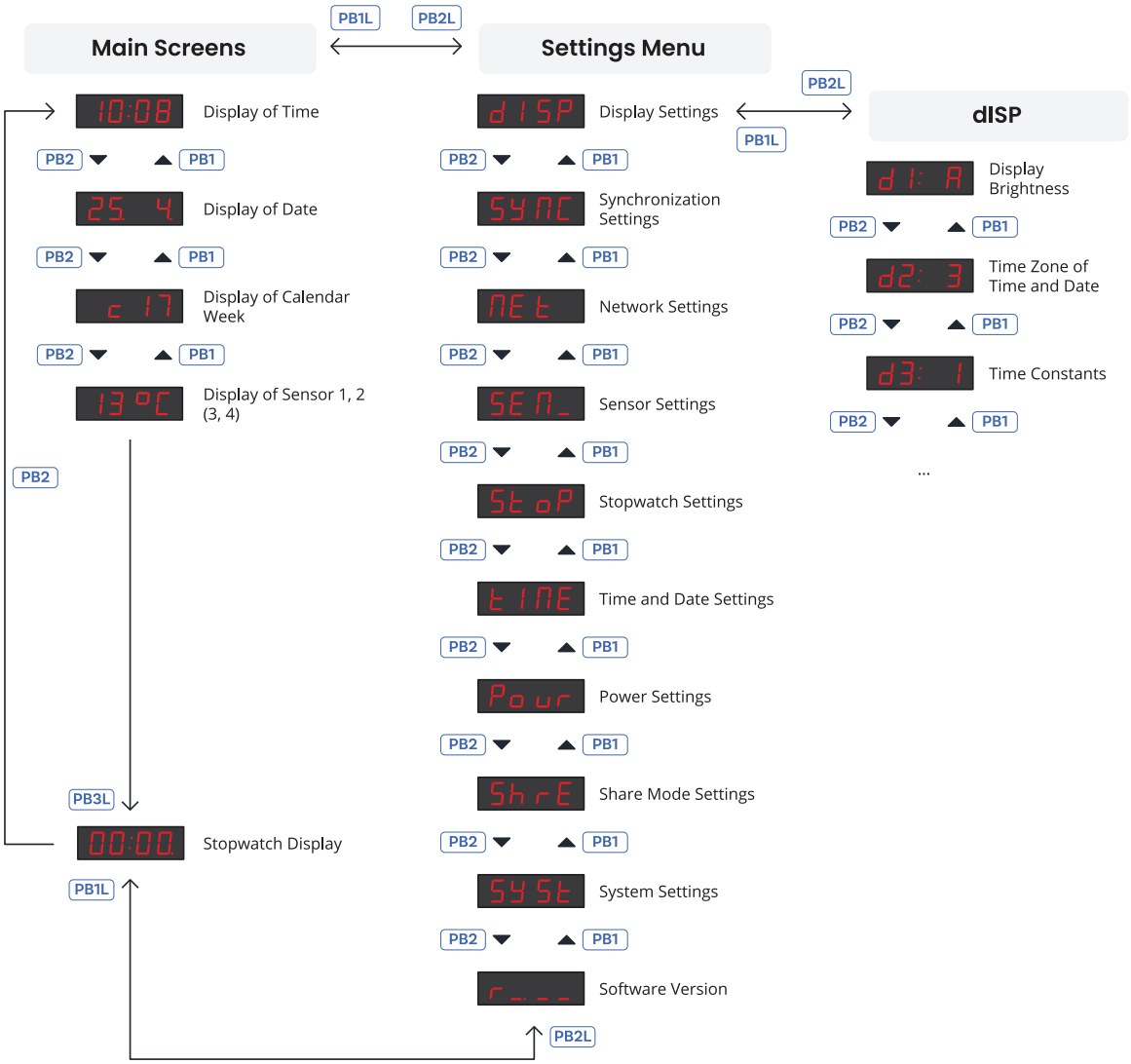

4.2.1.1. Example of dISP submenu setting

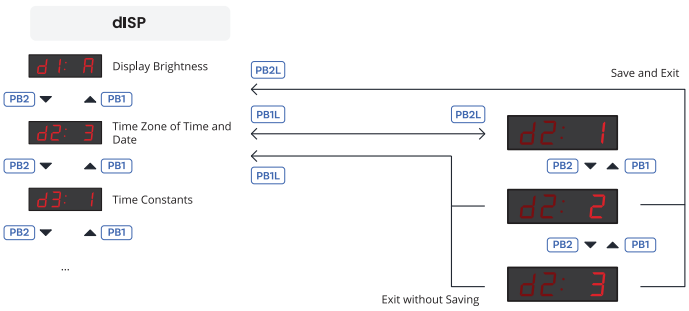

4.2.1.2. Example of NEt submenu setting

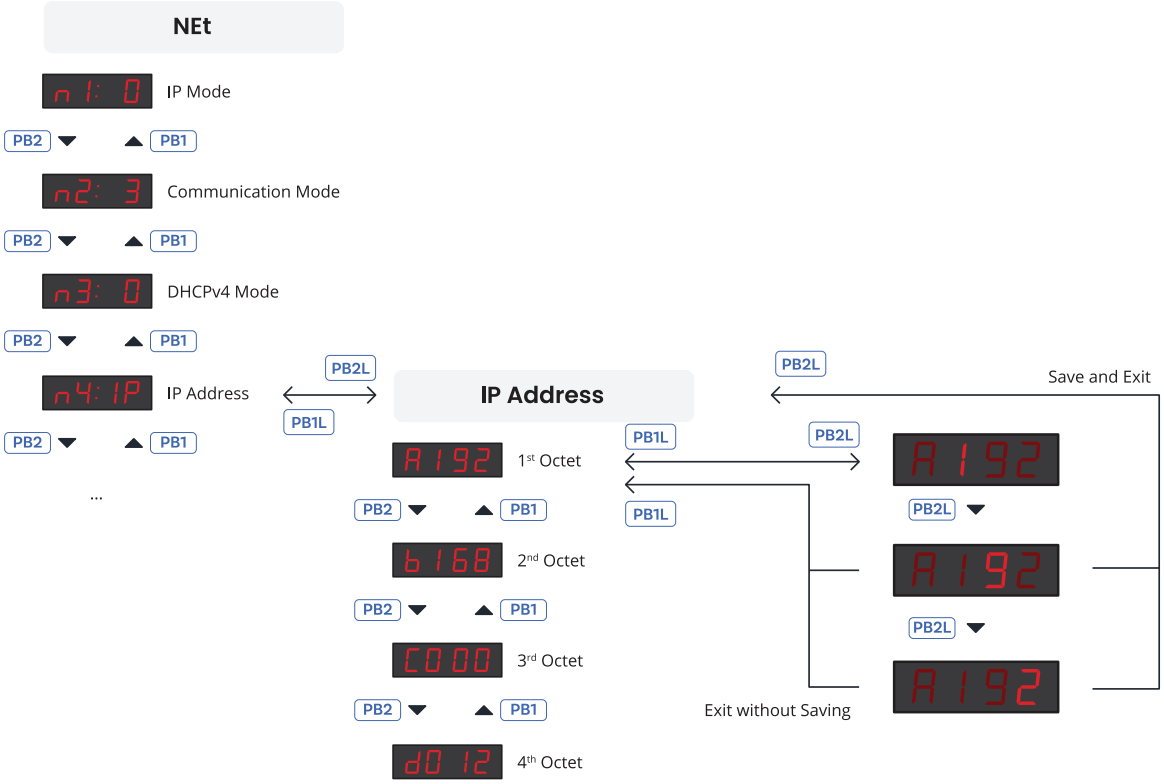

4.2.2. Navigation using remote controller

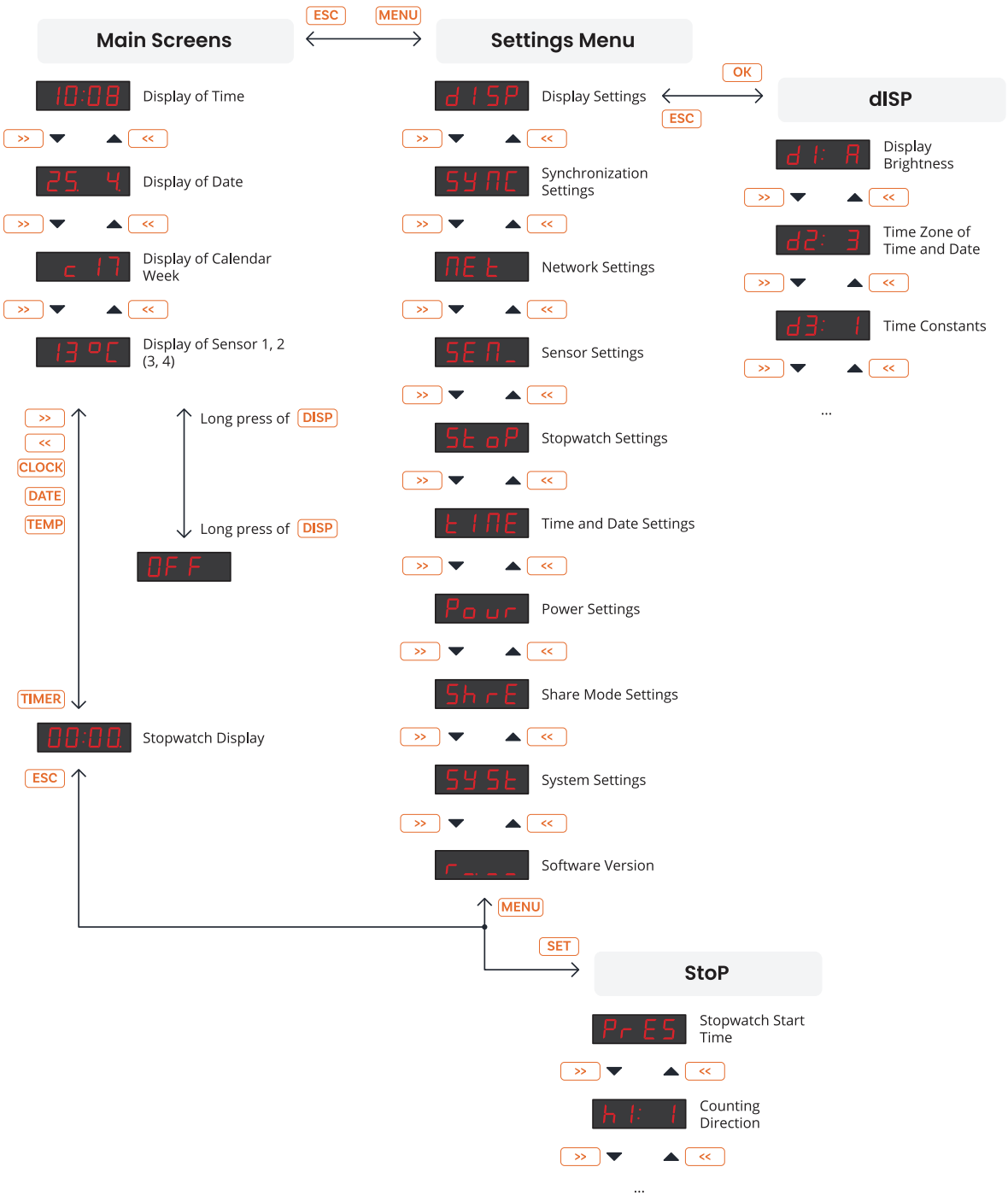

4.2.2.1. Example of dISP submenu setting

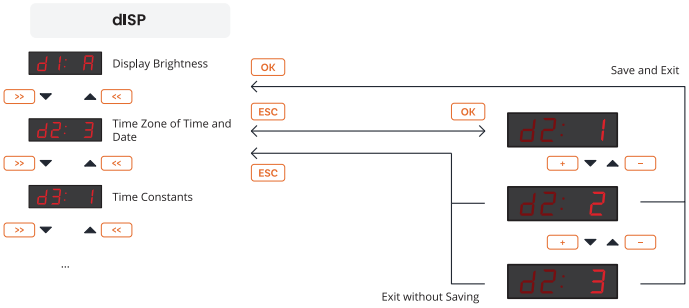

4.2.2.2. Example of NEt submenu setting

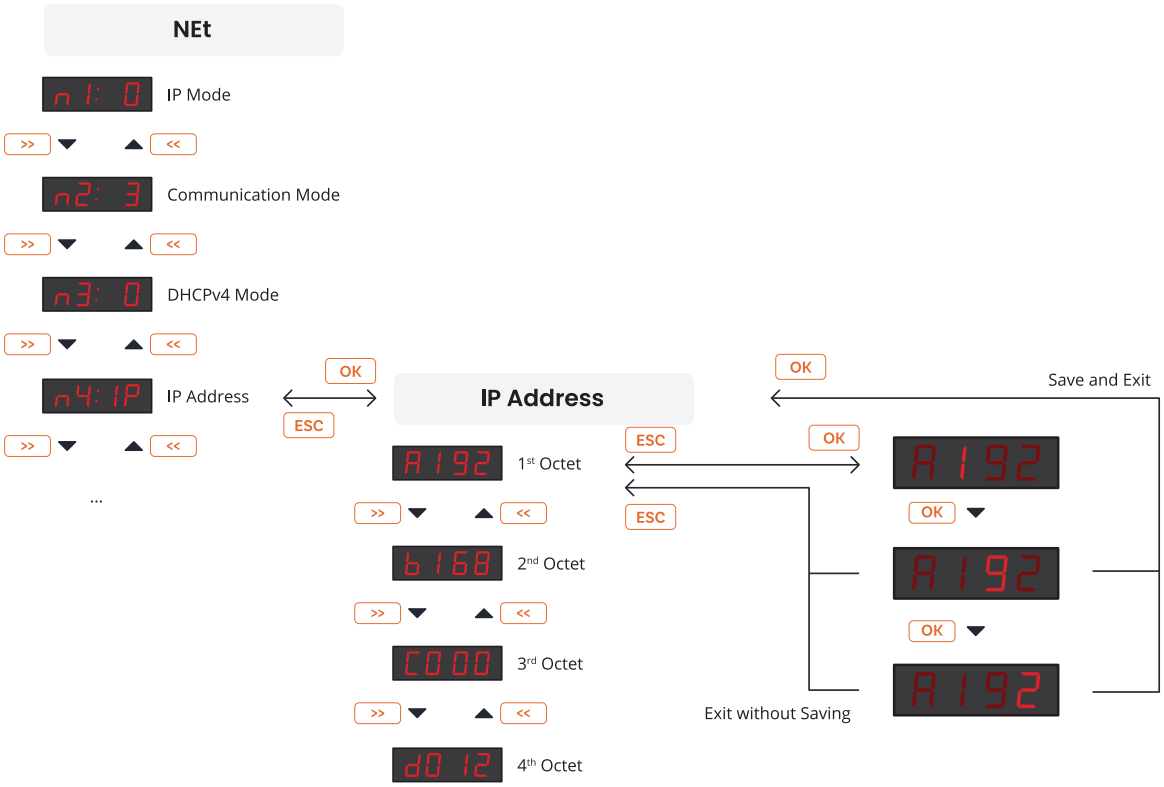

4.3. Web Interface

The web interface for this digital clock configuration tool is designed to provide users with a seamless and customizable experience in setting up their preferred digital timepiece directly within their browser.

4.3.1. How to Access the Web Interface?

To access the web interface of the clock, you first need to know its IP address. Please follow these steps to view the IP address of the clock:

Step 1: Find the IP Address of the Clock

1. From main screen (time, date, ...) enter the main menu by pressing the PB2L push-button or the MENU button on the remote controller.

2. Use the navigation buttons (the PB2 push-button or the >> button on the remote controller) to scroll throught the main menu until you reach the nEt menu.

3. Enter the nEt menu by pressing the PB2L push-button or the OK button on the remote controller.

4. Inside the nEt menu, use navigation buttons to cycle through the items until you reach n4:IP item.

5. Enter the n4:IP item by pressing the PB2L push-button or the OK button on the remote controller.

6. The first octet of clock's IP address is now shown (e.g., A192).
   Press the PB2 push-button or the >> button on the remote controller to cycle between octets (b , C and d).

Step 2: Access the Web Interface

1. On your computer or device, open a web browser (e.g., Chrome, Firefox, Edge).
2. Click into the address bar at the top of the browser window (where the website URL usually appears) and type the IP address you obtained from the clock's display.

```
[A192].[b168].[C254].[d062]
```

Make sure to enter the IP address without leading zeros in each octet (e.g., display shows 068 → enter `68` , display shows 000 → enter `0`)!

```
192.168.254.62
```

Press `Enter` on your keyboard.

3. The Authentication screen will appear. Enter the default password: `mobatime` , then press `Login` .

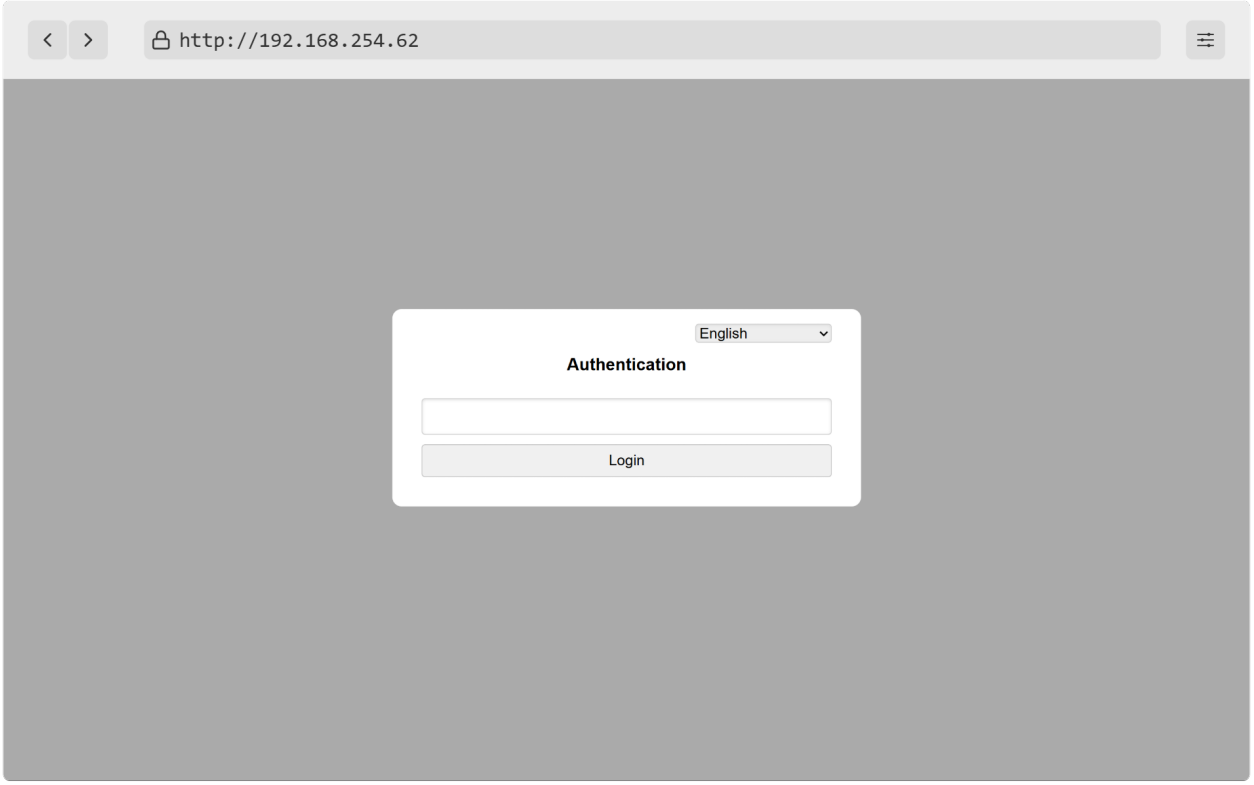

4.3.2. Generate SSL Certificate

For access to the digital clock via secured web pages - https it is necessary to burn SSL certificate directly to the digital clock. Clocks are provided with a factory certificate which is generated during the manufacturer process.

More info about accessing the Web Interface from web browser via HTTP and HTTPS protocols can be found in **Clock Operation** > **Network Clock Operation** > **HTTPS Chapter** .

Certificates are provided in the manufacturer process since SW version v7.12 . In the case of updating SW version in the digital clock from earlier versions, there will be an active alarm `Invalid SSL certificate` . So it is necessary to upload an SSL certificate by your own.
Certificates required:

- RSA 2048 bit
- Fingerprint using SHA-256

4.3.2.1. Generate Certificate

You can use any method to generate certificates.
If you are unfamiliar with the process of certificate generation, you may utilize this website.

1. Visit CertificateTools.com .

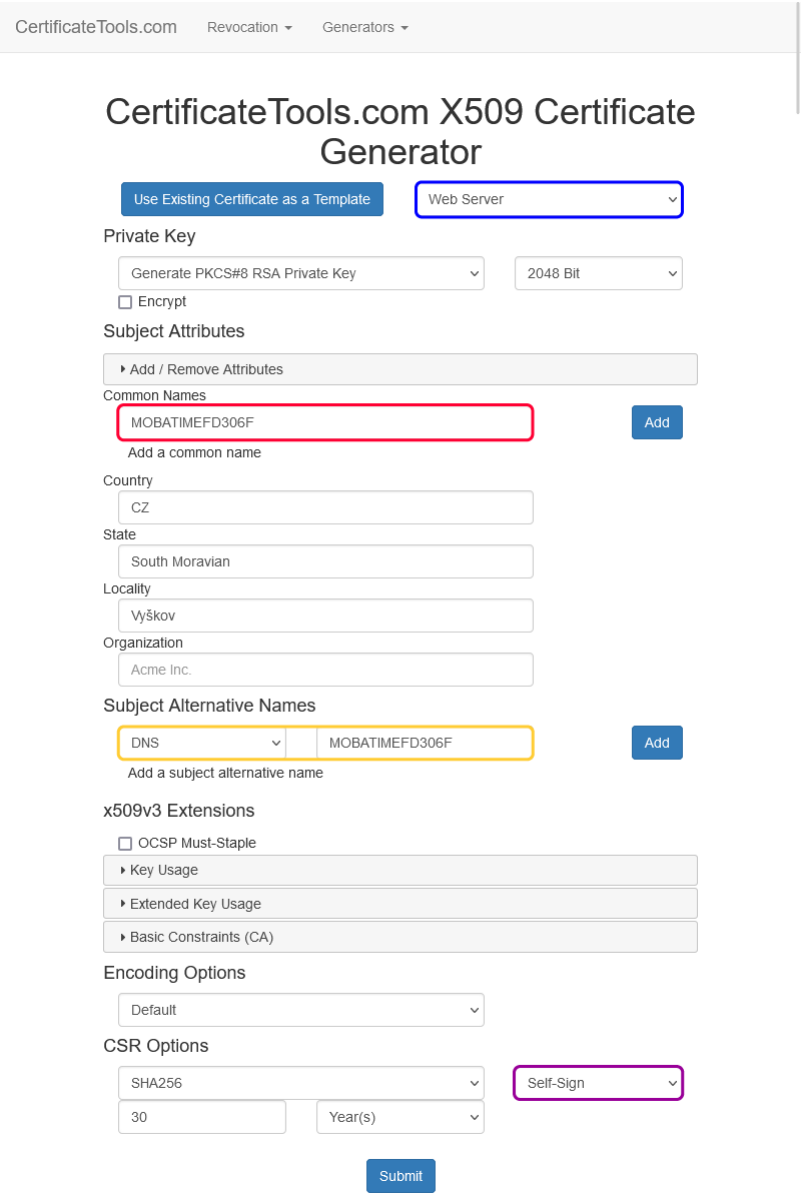

2. On the top right list please select option **Web Server** (marked by blue).
3. To the columns **Common Names** (marked by red), please type requested name of the subject and click **Add** .
   - For example `MOBATIMEFD306F` is used for the MAC address `00:16:91:fd:30:6f` in the manufacturer process.
4. To the column **Subject Alternative Names → DNS** (marked by yellow), please type requested name of the subject and then click **Add** .

   The requested name of the subject can be:
   - `MOBATIMEFD306F` (as stated above)
   - `MOBATIMEFD306F.local`
   - IP address
5. In the CSR Options please set CSR Only to the **Self-Sign** (marked by purple) and type requested validity of certificate, e.g. 30 years.
6. Optionally, you can also set other fields.
7. Then click **Submit** .
8. The web page will generate a certificate.
9. Download files **Private Key** and **PEM Certificate** .

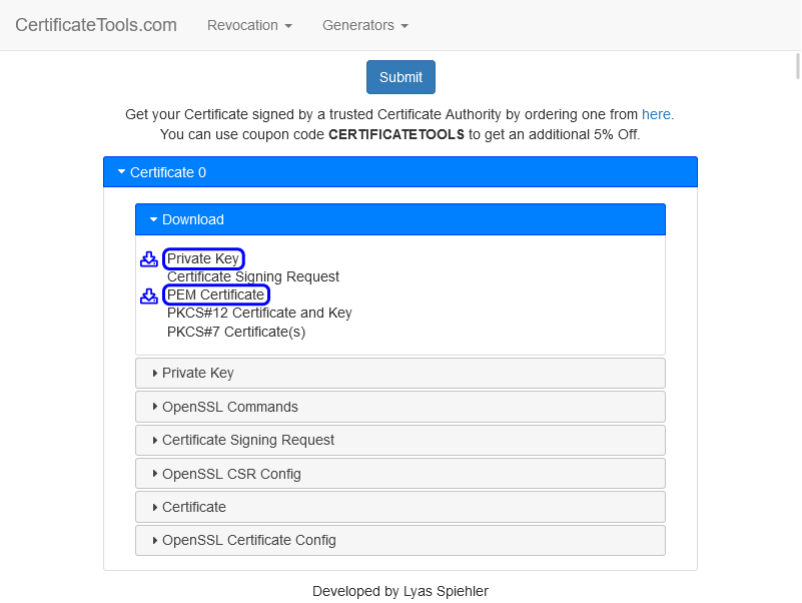

You can also use these instructions if you want to generate different SSL certificates.

4.3.2.2. Uploading a Certificate

1. Rename file `cert.key` (Private Key) to `key.pem` .
2. Rename file `cert.crt` (PEM Certificate) to `cert.pem` .
3. Copy these files to the folder for your TFTP server.
4. On the web page of digital clock navigate to section **Supervision → Services** .
5. Set the field **HTTPS server certificate upload** to **Private Key** and press **Apply** .
   It should display `Configuration saved` and the Private Key should be uploaded.
6. Set the field **HTTPS server certificate upload** to the **Certificate** and press **Apply** .
   It should display `Configuration saved` and the Certificate should be uploaded.

4.3.2.3. Certificate Application and Managing

Apply a New Certificate

1. Set the field **HTTPS server certificate manage** to the **Apply user certificates** and press **Apply** .
   It should display `Configuration saved` and a new certificate should be uploaded.

Delete User Certificate

1. Set the field **HTTPS server certificate manage** to the **Apply factory certificates (delete user certificates)** and press **Apply** .
   It should display `Configuration saved` and user certificates should be deleted.

4.3.3. Overview Tab

This is the front page of web interface. Here you can see system basic system information such as Device type, description, Firmware version, Time, MAC and IPv4 address.

Nothing at this tab cannot be edited.

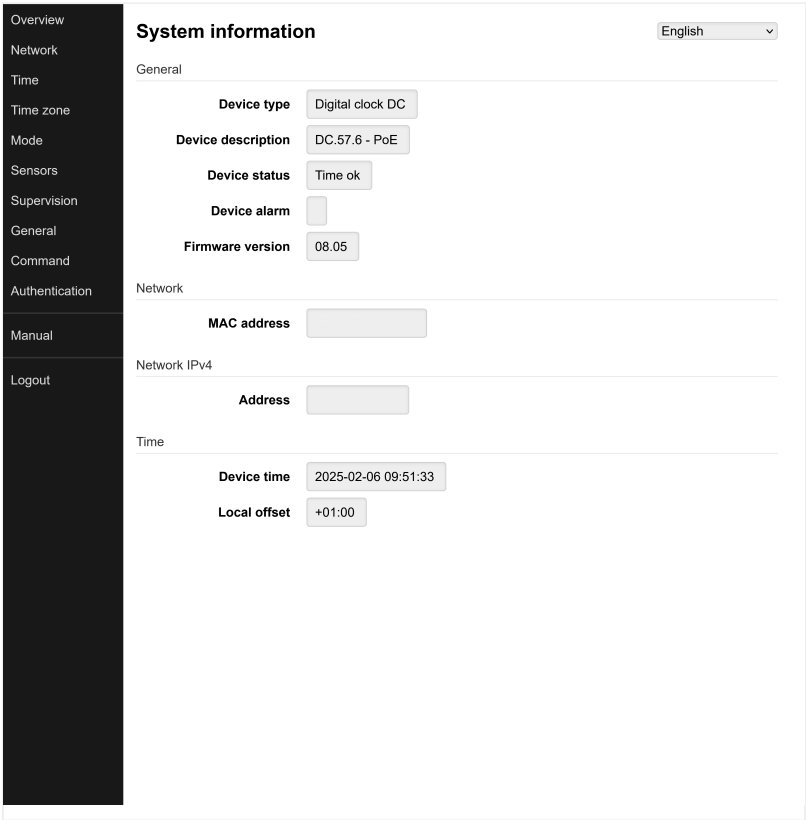

4.3.4. Network Tab

This tab serves as network setting of clock parameters. You can almost set any network-related settings, such as IP mode, multicast enable or disalbe, IPv4 and IPv6 address, even Timezone client port.

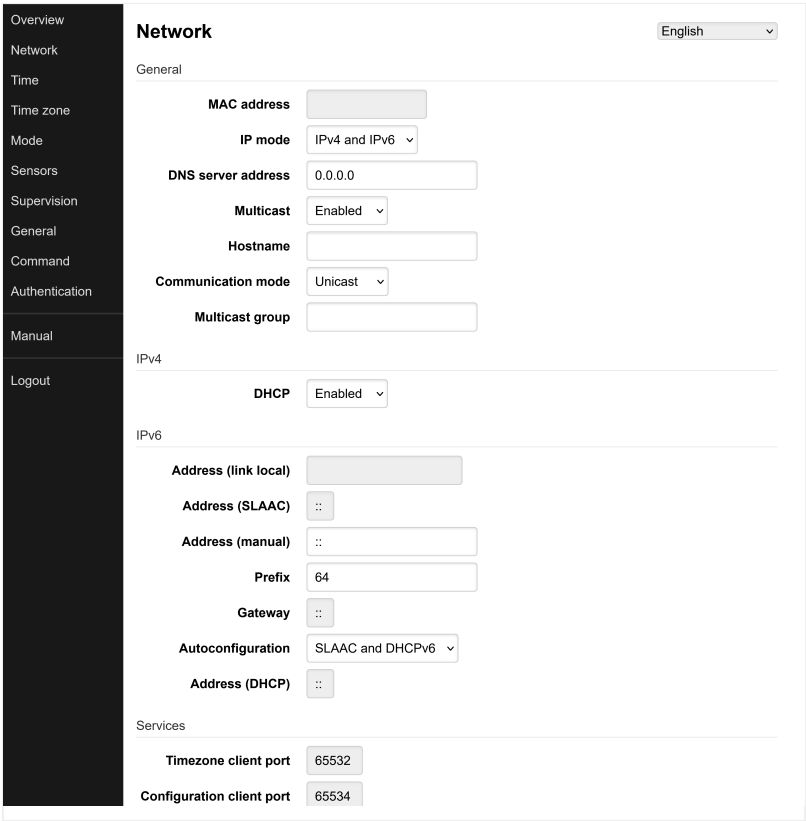

4.3.5. Time Tab

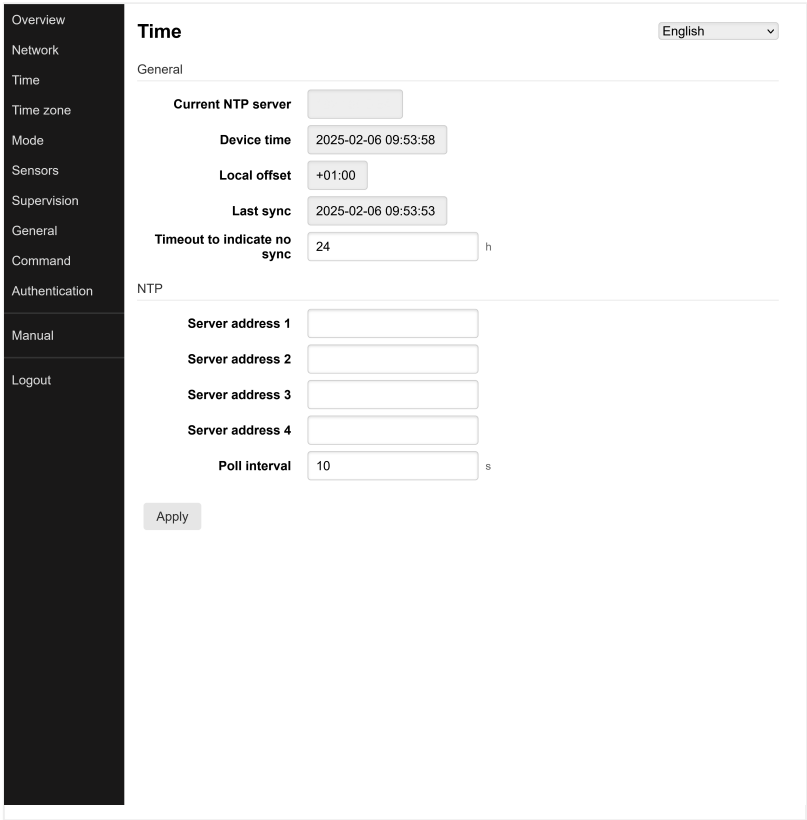

4.3.6. Time Zone Tab

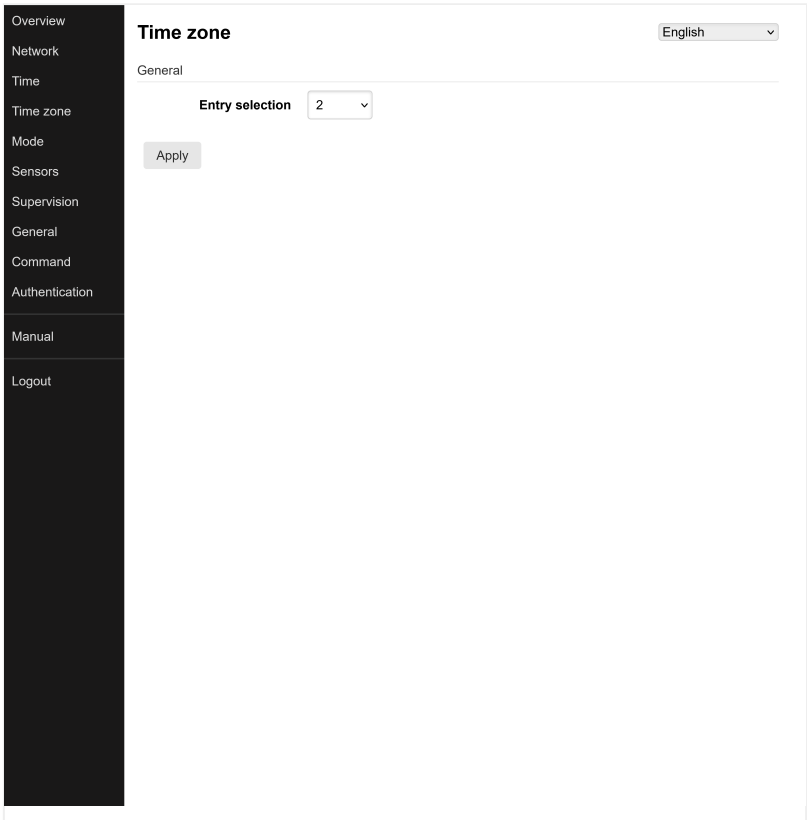

4.3.7. Mode Tab

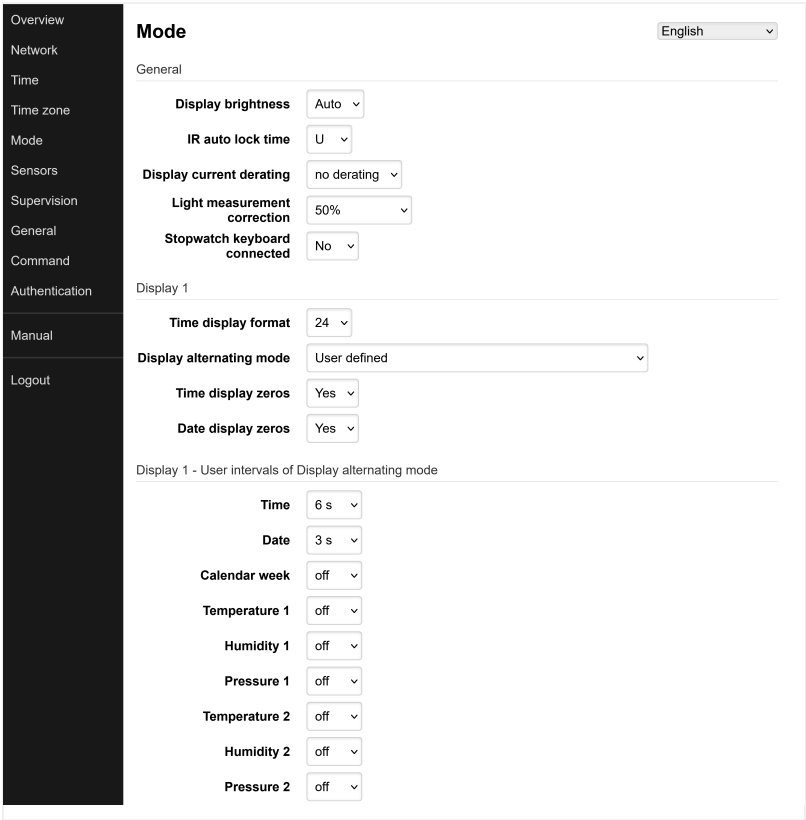

4.3.8. Sensors Tab

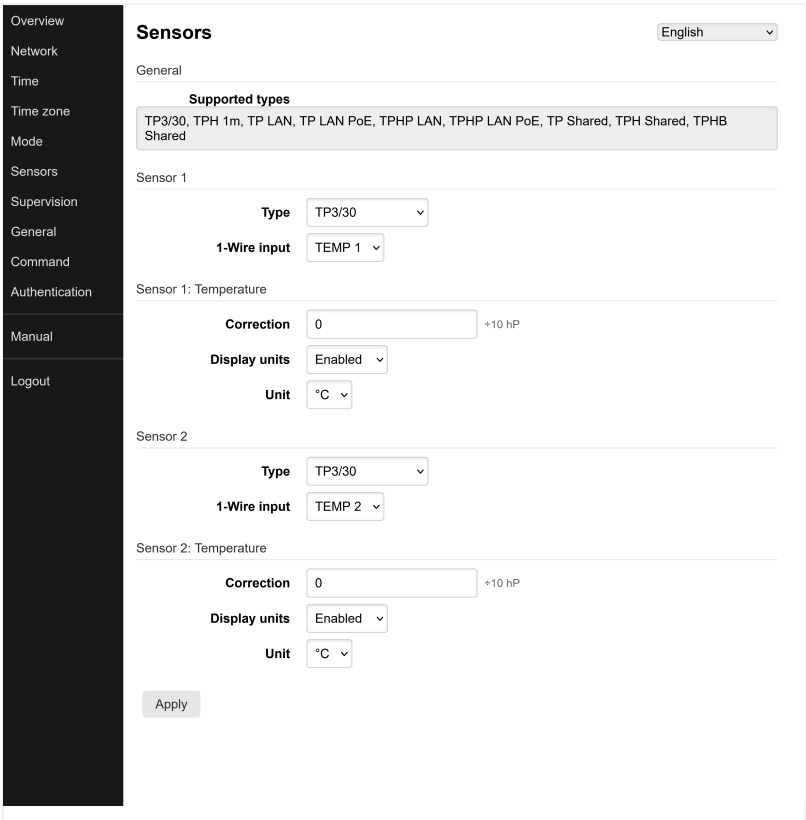

4.3.9. Supervision Tab

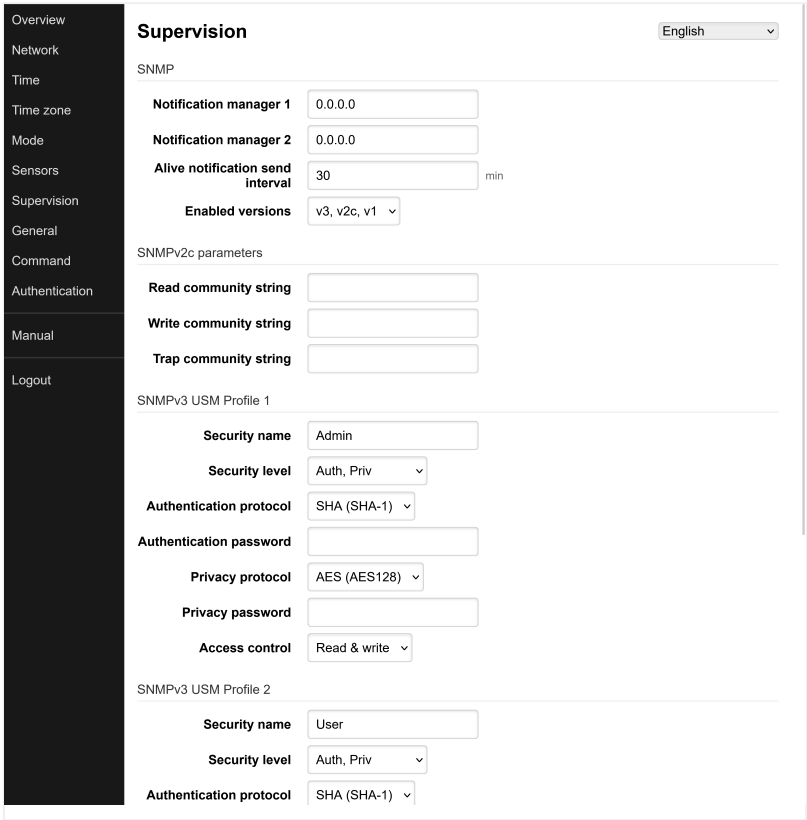

4.3.10. General Tab

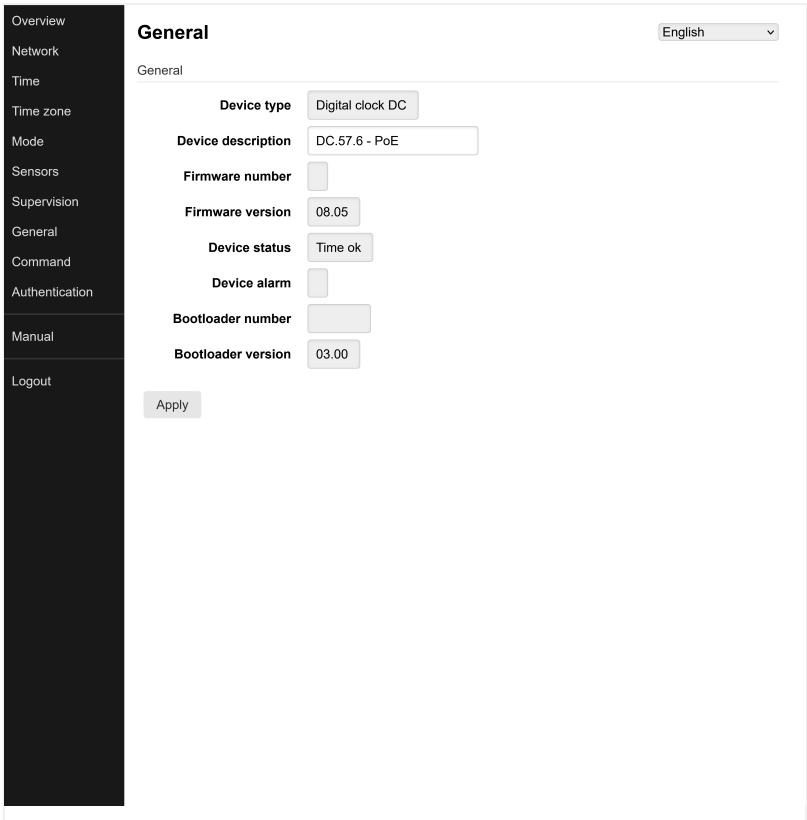

4.3.11. Command Tab

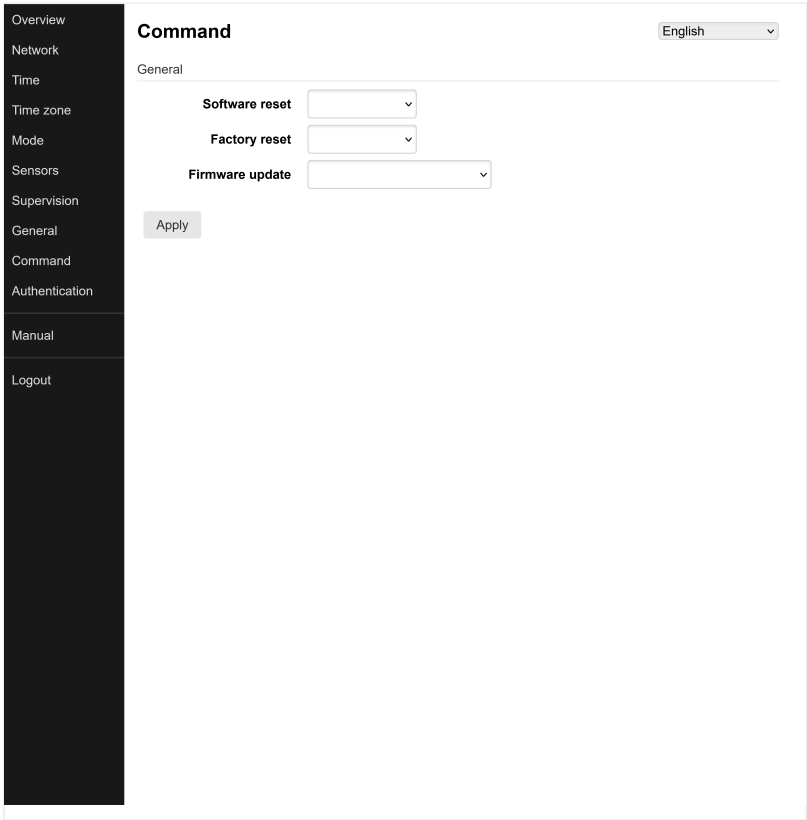

4.3.12. Authentication Tab

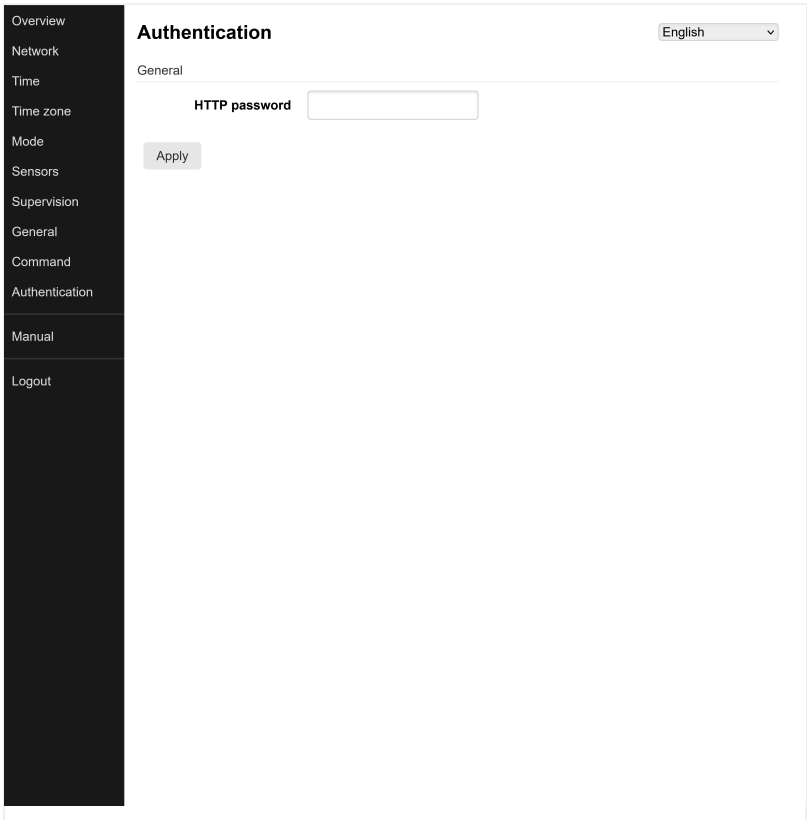

5 Display Settings

The display shows following:

Enter digital clock's main menu and navigate to d I S P submenu. Enter by pressing the PB2L push-button or the OK button on the remote controller.

Display Settings Summary

Menu Item	Description	Value(s)
d 1	Display Brightness	1 – 3 0 , A •
d 2	Timezone of Time and Date	0 – 6 4 , A •, U 1 – U 7
d 3	Time Constants for Automatic Data Switching Over	1 •, 2 , 3 , 4 , 5 , 6 , U , 0
d 4	12-Hour Format	0 •, 1
d 5	Time with Leading Zero	0 , 1 •
d 6	Date with Leading Zero	0 •, 1
d 8	Clock Address for IR Remote Controller (Moved to S Y S t menu since version r 7. 1 5)	1 – 9 9
d 9	IR Remote Controller Auto-Lock (Moved to S Y S t menu since version r 7. 1 5)	1 – 6 0 , U
1 0	Display of Time (User Defined)	0 – 6 0 [s]
1 1	Display of Date (User Defined)	0 – 6 0 [s]
1 2	Display of Calendar Week (User Defined)	0 – 6 0 [s]
1 3	Display of Temperature 1 (User Defined)	0 – 6 0 [s]
1 4	Display of Humidity 1 (User Defined)	0 – 6 0 [s]
1 5	Display of Pressure 1 (User Defined)	0 – 6 0 [s]
1 6	Display of Temperature 2 (User Defined)	0 – 6 0 [s]
1 7	Display of Humidity 2 (User Defined)	0 – 6 0 [s]
1 8	Display of Pressure 2 (User Defined)	0 – 6 0 [s]

Default values are indicated with •, e.g., 1 •.

5.1. Display Brightness

Navigation

Menu:

Item:

Available values:

1 – 30, A

Description

Display brightness setting allows you to customize the luminance of the display. Brightness level is defined by numerical values or by sensor controlled automatic adjusting.

Available Settings

Value(s)	Description
1 – 30	Lower value = lower brightness, higher value = higher brightness
A (default value)	Automatic brightness

Adjusting the brightness in manual mode to the maximum can reduce the life of displays in the long run. We recommend leaving the automatic brightness control set.

5.2. Timezone of Time and Date

Navigation

Menu:

Item:

Available values:

0 – 64, A, U1 – U7

Description

Timezone of displayed time and date refers to geographical region or offset from UTC (that is used as a reference point for displaying the current time and date). Timezone is crucial aspect of timekeeping and helps ensure consistency and accuracy in communication, scheduling and record-keeping.

Available Settings

Value(s)	Description
0 – 64	Timezone entries, see Timezones Table chapter
A (default value)	Automatically set timezone

Value(s)	Description
U 1 – U 7	Preconfigured timezone from MOBA-NMS software

5.3. Time Constants for Automatic Data Switching Over

Navigation

Menu:

Item:

Available values:

1 , 2 , 3 , 4 , 5 , 6 , U , 8 , 0

Description

This settings allows to choose the displayed data together with or without automatic switching over to next data. The time sequence of corresponding figures can be user-defined or predefined time sequence can be used.

Available Settings

Value(s)	Description
1 (default value)	Continuous display of time
2	Continuous display of date
3	Continuous display of temperature
4	Continuous display of stopwatch
5	Display sequence: time 6 s, date 3 s
6	Display sequence: time 8 s, date 3 s, temperature 3 s
U	Time constants set up by user in seconds for each specific displayed data, see User-Defined Time Constants
8	Continuous display of shared screen
0	Automatic switching over is disabled

5.3.1. User-Defined Time Constants

Navigation

(example item 1 0 – Display of time)

Menu:

Item:

Available values:

0 – 60 (seconds)

Available Settings

Menu item	Function	Values
10	Display of time	0–60 (seconds)
11	Display of date	0–60 (seconds)
12	Display of calendar week	0–60 (seconds)
13	Display of temperature 1	0–60 (seconds)
14	Display of humidity 1	0–60 (seconds)
15	Display of pressure 1	0–60 (seconds)
16	Display of temperature 2	0–60 (seconds)
17	Display of humidity 2	0–60 (seconds)
18	Display of pressure 2	0–60 (seconds)

5.4. 12-Hour Format

Navigation

Menu:

Item:

Available values:

0, 1

Description

The 12-hour format is widely used convention to represent time within 12-hour cycle, typically with **a.m.** and **p.m.** designations. The time covers 12-hour period, starting from midnight (12:00 AM) end ending at noon (11:59 AM), then continuing from noon (12:00 PM) until just before midnight (11:59 PM).

12-hour cycle is indicated by **a dot at first digit in upper left corner** .

a.m. (10:08)

p.m. (10:08)

Available Settings

Value	Description
0 (default value)	Disabled
1	Enabled

5.5. Time with Leading Zero

Navigation

Menu:

Item:

Available values:

0 , 1

Description

Time with leading zero refers to representing hours, minutes and seconds in a time format with with zero before single-digit values. This ensures uniformity in time display and enhances readability.

Time without leading zero

Time with leading zero

Available Settings

Value	Description
0	Time with leading zero is disabled
1 (default value)	Time with leading zero is enabled

5.6. Date with Leading Zero

Navigation

Menu:

Item:

Available values:

0 , 1

Description

Date with leading zero refers to representing days, month and years in a date format with with zero before single-digit values. This ensures uniformity in time display and enhances readability.

Date without leading zero

Date with leading zero

Available Settings

Value	Description
0 (default value)	Date with leading zero is disabled
1	Date with leading zero is enabled

5.7. Clock Address for IR Remote Controller

Changed in version r7.15: This item has been moved to the SYSt menu item c3 .

Navigation

Menu:

Item:

Available values:

1 – 99

Description

The clock address for an IR remote controller is a specific identifier assigned to digital clock. This code serves as unique “address” that allows the remote controller to communicate and control particular clock. The clock control address is essential for ensuring that the remote controller signals and commands are received by the target device.

Available Settings

Value(s)	Description
1 – 99	Set clock address

More information can be found in Clock Address Display chapter.

5.8. IR Remote Controller Auto-Lock

Changed in version r7.15: This item has been moved to the SYSt menu item c4 .

Navigation

Menu: disP

Item: d9: 1

Available values: 0 – 60, U

Description

This feature ensures the IR reception lock of digital clock after a specific period of inactivity (since the last press of any button on the IR remote controller), preventing unintentional button presses on the IR remote controller.

Available Settings

Value(s)	Description
1 – 60 (minutes)	Time in minutes for auto-lock since last press of a button on IR remote controller
U	Auto-Lock is OFF

More information can be found in Automatic Lock .

5.9. Remote Control Lock

Changed in version r7.15: These setting has been moved to the SYSt menu (see Remote Control Lock chapter).

The clock can be locked against unauthorized or unwanted operation using the remote controller.

5.9.1. Manual Lock

To lock all clock within the range of IR remote controller beam, long-press the F2 button. Clock lock is indicated by displaying LOC on the clock display.

LoC

5.9.2. Automatic Lock

To set the IR remote controller auto-lock after time period, navigate to the disP menu item d9 (see IR Remote Controller Auto-Lock chapter).

Automatic lock of the clock after **x** minutes is not indicated on the display.

5.9.3. Clock Address Display

To set clock address for IR remote controller, navigate to the dISP menu item dB (see Clock Address for IR Remote Controller chapter).

The address display is enabled by press of the F3 button and is indicated on the display as A xx .

The address is displayed only when the clock is locked.

xx represents the set address with initial zero.

A01 → Clock Address 1

5.9.4. Unlocking the Clock

To unlock all clocks within the range of the IR remote controller beam, long-press the F1 button. Clock unlock is indicated by displaying UNL on the clock display.

To unlock only specific clock with a specific address, press the F1 button followed by the clock address in two-digit format with leading zero.

Thus, for a clock with address 5, the sequence will be as follows:

Press the F1 button → Set the first digit number to 0 → Set the second digit number to 5

Successful unlocking is indicated by displaying UNL on the clock display.

6 Synchronization Settings

The display shows following:

Enter digital clock's main menu and navigate to SYNC submenu. Enter by pressing the PB2L push-button or the OK button on the remote controller.

Synchronization Settings Summary

Menu Item	Description	Value(s)
o1	Timezone of Synchronization Source	0 – 64, A
o2	Type of Synchronization	1 – 11, A
o4	MOBALine Time Zones	1 – 20, 0
o5	Server MOBATIME Time Zones	1 – 15, 0
12	Timeout for Indication of State without Synchronization	to *
13	Offset of Displayed Time	oF *

Default values are indicated with •, e.g., 1 •.
Values with * have an accessible submenu, e.g., 1P *.

6.1. Timezone of Synchronization Source

Navigation

Menu:

Item:

Available values:

0 – 64, A

Description

Timezone synchronization is process used to ensure that timekeeping is accurately aligned with a specific timezone. This is essential for coordinating activities, scheduling events and maintaining consistency in a globalized world.

Available Settings

Value(s)	Description
0 – 64	Timezone entries, see Timezones Table chapter
A	Automatically set timezone

6.2. Type of Synchronization

Navigation

Menu:

Item:

Available values:

1 – 10, A

For a proper synchronization process, you must specify the type of source used in your time system.

Available Settings

Value	Description
A	Autodetection (MOBALine, MOBATIME serial code, DCF, IRIG-B or NTP)
1	Autonomous operation without synchronization
2 [1]	Synchronization DCF
3 [1]	MOBATIME serial code
4 [1]	MOBALine
5 [1]	24 V VDC impulses, minute intervals
6 [1]	24 V VDC impulses, half minute intervals
7 [1]	24 V VDC impulses, second intervals
8 [1]	DCF-FSK- IRIG-B standard, IRIG-B 123, IRIG-B DIEM, AFNOR A, AFNOR C
9 [1]	Active DCF code
10 [2]	GPS

1 only for digital clock synchronized by LGC variant

2 only for digital clock synchronized by GPS variant

6.3. Master Clock Time Zones

This chapter provides clarification regarding the functionality of Master Clock System in simultaneous transmission of main local time alongside with preconfigured time zones.

Users have the option to select and display any of these preconfigured time zones.

If the item o4 / o5 is set to value 0 , received time on digital clock will set according to Timezone of Time and Date (d15P menu item d2).

If you set any preconfigured time zone on your digital clock, it will inherit the time definition from Master Clock (the Timezone of Time and Date - d15P menu item d2 - must be set to value A).

6.3.1. MOBALine Time Zones

This setting is available only for digital clocks with LGC variant.

Navigation

Menu:

Item:

Available values:

1 – 20 , A

Available Settings

Value(s)	Description
1 – 20	Preconfigured timezones
0	Off

6.3.2. Server MOBATIME Time Zones

This setting is available only for digital clocks with NTP, PoE, WiFi and WiFi5 variant.

Menu : SYNC
Item : o5
Values : 1 – 15 , 0

Navigation

Menu:

Item:

Available values:

1 – 15 , 0

Available Settings

Value(s)	Description
1 – 15	Preconfigured timezones
0	Off

6.4. Timeout for Indication of State without Synchronization

Navigation

Menu:

Item:

Available values:

to (submenu)

Description

This section defines the timeout period used before the clock indicates the state without synchronization.

This means that if no synchronization signal is received within set time interval, the system enters the no-sync state, which is visually indicated by **blinking colon(s)** on the display.

The default timeout value for indication of state without synchronization is **24 hours** .

Available Settings

Submenu to for setting the timeout for signalling a state without synchrornization

Value	Description
ddd	Timeout value in hours set digit by digit in range 1–255 hours

6.5. Offset of Displayed Time

Navigation

Menu:

Item:

Available values:

oF (submenu)

Description

Offset of displayed time refers to the adjustment made to a displayed time value to reflect a time difference relative to a reference point. This offset allows users to view time information that aligns with their preferences or requirements.

Available Settings

Submenu oF for Setting the Offset of Displayed Time

Value	Description
- d d d	Timeout value in multiples of 10 ms set digit by digit in range –999 to 999 (*10 ms) Range of each digit is 0–9 - = negative offset value (e.g. -150 → offset value -1.5 s)

7 Network Settings

Network settings are available only for NTP, PoE, PoE+, WiFi or WiFi5 digital clock variant.

The display shows following:

Enter digital clock's main menu and navigate to nEt submenu. Enter by pressing the PB2L push-button or the OK button on the remote controller.

Network Settings Summary

Menu Item	Description	Value(s)
n1	IP Mode	0•, 1, 2
n2	Communication Mode	0•, 1
n3	DHCPv4 Mode	0•, 1
n4	IP Address	IP *
n5	Subnet Mask	Su *
n6	Default Gateway	Gt *
n7	Multicast Address	Mc *
n8	Unicast NTP Address	Uc *
n9	NTP Polling Interval	P, *
10	Address Autoconfiguration (SLAAC)	0, 1•
11	DHCPv6 Mode	0, 1•
12	WiFi Mode	1•, 2, 3
13	Multicast Mode for Configuration of Digital Clock	0•, 1
14	SNMP Protocol	0, 1•
15	Web Server	0, 1•
16	Web Server Security Mode	0, 1, 2•, 3
LOCL	Link Local Address	*
SLAC	Autoconfiguration SLAAC	*
dHCP	First Address from DHCPv6	*

Menu Item	Description	Value(s)
MANU	Manually Set IPv6 Address	*
PrEF	Prefix for Manually Set IPv6 Address	*
GAtE	Gateway from Autoconfiguration SLAAC	*
MAC	MAC Address	*

Default values are indicated with •, e.g., 1 •.
Values with * have an accessible submenu, e.g., IP *.

7.1. IP Mode

Navigation

Menu:

Item:

Available values:

0, 1, 2

Description

IP mode refers to specific configuration and settings. It defines how devices within a network interact, how they are addressed and how data is routed.

IP mode determines whether devices within a network use IPv4 or IPv6. IPv4 is older and more widely used version, but on the other hand IPv6 is designed to address the limitation of IPv4 and accommodate the growing number of connected devices.

Available Settings

Value	Description
0 (default)	NTP, PoE: IPv4 / IPv6 WiFi: not supported
1	NTP, PoE: IPv4 WiFi: IPv4
2	NTP, PoE: IPv6 WiFi: not supported

7.2. Communication Mode

Navigation

Menu:

Item:

Available values:

0 , 1

Description

Communication modes are fundamental to how devices interact and share data within a network environment. These modes determine the rules, protocols and mechanisms governing data transfer.

Unicast communication involves sending data from one source to one specific destination device. It is a one-to-one communication mode.

Multicast communication involves sending data to specific group (group of devices, multicast group). Only devices that have joined the multicast group can receive the data.

Available Settings

Value	Description
0 (default value)	Unicast
1	Multicast

7.3. DHCPv4 Mode

Navigation

Menu:

Item:

Available values:

0 , 1

Description

DHCPv4 (**D** ynamic **H** ost **C** onfiguration **P** rotocol for IP **v4**) is a network protocol used to automate and simplify the process of assigning and managing IP addresses and related network configuration information within IPv4-based network.

Available Settings

Value	Description
0	DHCPv4 disabled
1 (default value)	DHCPv4 enabled

7.4. IP Address

Navigation

Menu:

Item:

Available values:

IP (submenu)

Description

An IP address (**I** nternet **P** rotocol address) is a unique numerical label assigned to each device connected to network that uses Internet protocol for communication. IP addresses serve as identifiers, allowing devices to send and receive data to and from one another across a network.

Here you can edit IPv4 network parameters in manual setting mode or display parameters assigned to DHCPv4.

Submenu

Submenu IP for Displaying and Editing IPv4 Address

Value	Description	Range
A	1 st octet IPv4 address	0–255, set digit by digit
b	2 nd octet IPv4 address	0–255, set digit by digit
C	3 rd octet IPv4 address	0–255, set digit by digit
d	4 th octet IPv4 address	0–255, set digit by digit

7.5. Subnet Mask

Navigation

Menu:

Item:

Available values:

Su (submenu)

Description

Subnet mask is a numerical value used in networking to define the boundaries and division of IP addresses within a network. It works in conjunction with IP addresses, helping to determine which part of the IP address identifies the network and which part identifies individual device within that network.

Here you can edit IPv4 network parameters in manual setting mode or display parameters assigned to DHCPv4.

Submenu

Submenu 5 u for Displaying and Editing IPv4 Address

Value	Description	Range
A	1 st octet IPv4 address	0–255, set digit by digit
b	2 nd octet IPv4 address	0–255, set digit by digit
C	3 rd octet IPv4 address	0–255, set digit by digit
d	4 th octet IPv4 address	0–255, set digit by digit

7.6. Default Gateway

Navigation

Menu:

Item:

Available values:

G t (submenu)

Description

Default gateway serves as a key network device that faciliates communication between devices within a local network and devices in external networks.

Here you can edit IPv4 network parameters in manual setting mode or display parameters assigned to DHCPv4.

Submenu

Submenu G t for Displaying and Editing IPv4 Address

Value	Description	Range
A	1 st octet IPv4 address	0–255, set digit by digit
b	2 nd octet IPv4 address	0–255, set digit by digit
C	3 rd octet IPv4 address	0–255, set digit by digit
d	4 th octet IPv4 address	0–255, set digit by digit

7.7. Multicast Address

Navigation

Menu:

Item:

Available values:

Nc (submenu)

Description

Multicast address is a specialized type of IP address used in networking to deliver data packets from one sender to multiple recipients efficiently.

Here you can set the multicast group IPv4 address.

The mutilcast address can be set only if the Communication mode is set to multicast (the nEt menu item n2 is set to value 1).

Submenu

Submenu Nc for Displaying and Editing IPv4 Address

Value	Description	Range
A	1 st octet IPv4 address	0–255, set digit by digit
b	2 nd octet IPv4 address	0–255, set digit by digit
C	3 rd octet IPv4 address	0–255, set digit by digit
d	4 th octet IPv4 address	0–255, set digit by digit

7.8. Unicast NTP Address

Navigation

Menu:

Item:

Available values:

Uc (submenu)

Description

Unicast NTP address refers to the specific IP address of an NTP server or time source to which a device sends requests for time synchronization.

Here you can set unicast NTP server IPv4 address.

Submenu

Submenu Uc for Displaying and Editing IPv4 Address

Value	Description	Range
A	1 st octet IPv4 address	0–255, set digit by digit
b	2 nd octet IPv4 address	0–255, set digit by digit
C	3 rd octet IPv4 address	0–255, set digit by digit
d	4 th octet IPv4 address	0–255, set digit by digit

7.9. NTP Polling Interval

Navigation

Menu:

Item:

Available values:

P1 (submenu)

Description

NTP poll interval refers to the frequency at which a NTP client sends time synchronization requests (NTP polls) to its configured NTP servers on peers. It determines how often the client checks and adjusts its internal clock to maintain accurate and synchronized time.

Submenu

Submenu P1 for Setting of NTP Polling Interval

Value	Description
ddd	Value of the polling interval set digit by digit in range 10–999 seconds The range of each digit is 0–9

7.10. Address Autoconfiguration (SLAAC)

Navigation

Menu:

Item:

Available values:

0, 1

Description

Address autoconfiguration (SLAAC) is an IPv6 address configuration method that enables devices to automatically assign and configure their IPv6 addresses based on information provided in router advertisement messages. It simplifies the process of IP address assigment in IPv6 networks and is a fundamental part of the IPv6 addressing architecture.

Available Settings

Value	Description
0	SLAAC disabled
1 (default value)	SLAAC enabled

7.11. DHCPv6 Mode

Navigation

Menu:

Item:

Available values:

0 , 1

Description

DHCPv6 (**D** ynamic **H** ost **C** onfiguration **P** rotocol for IP **v6**) is a network protocol used to dynamically assign IPv6 addresses and configuration information to devices within an IPv6 network. DHCPv6 mode determines how IPv6 address configuration is managed.

Available Settings

Value	Description
0	DHCPv6 disabled
1 (default value)	DHCPv6 enabled

7.12. WiFi Mode

This setting is available only for digital clocks with WiFi or WiFi5 variant

Navigation

Menu:

Item:

Available values:

1 , 2 , 3

Description

WiFi Modes determine the capabilities and characteristics of the wireless network, including data rates, range and compatibility with different devices.

Description of individual modes can be found in Clock Operation > Network Clock Operation > WiFi Operation Modes chapter.

Available Settings

Value	Description
1 (default value)	User-defined wireless network (defined via MOBA-NMS or Web Interface)
2	Default wireless network: MOBA-WIFI
3	AP mode

7.13. Multicast Mode for Configuration of Digital Clock

Navigation

Menu:

Item:

Available values:

0, 1

Description

Multicast mode for the configuration of digital clock refers to a method of distributing time configuration information and updates to multiple digital clocks over a network using multicast communication. This mode is commonly used in scenarious where you have a large number of digital clocks that need to be synchronized with a central time server.

Available Settings

Value	Description
0	Disable multicast mode
1 (default value)	Enable multicast mode

7.14. SNMP Protocol

Navigation

Menu:

Item:

Available values:

0, 1

Description

SNMP (**S** imple **N** etwork **M** anagement **P** rotocol) is widely used network management protocol in networking. It is designed for monitoring and managing devices and network resources on IP networks. SNMP allows network administrators to collect information about network devices, configure their settings and receive notifications about network events.

Available Settings

Value	Description
0	Disable SNMP
1 (default value)	Enable SNMP

7.15. Web Server

Navigation

Menu:

Item:

Available values:

0 , 1

Description

Thanks to web server, you can easily set-up, view and monitor digital clock.

Available Settings

Value	Description
0	Disable web server
1 (default value)	Enable web server

7.16. Web Server Security Mode

This setting is available (visible) only if the Web Server is enabled – the NEt menu item 15 is set to value 1 (see Web Server chapter).

Navigation

Menu:

Item:

Available values:

0 , 1 , 2 , 3

Description

This setting allows you to configure the security mode of the web server, determining how web server requests are handled.

Available Settings

Value(s)	Description
0	HTTP only
1	HTTPS only
2 (default value)	HTTP and HTTPS
3	HTTP to HTTPS redirect

7.17. Link Local Address

Navigation

Menu:

Item:

Available values:

submenu for displaying IPv6 address

Description

Link Local Address is type of IPv6 address that is used for communication within single network segment or link. Link Local Addresses are designed to work on the local network and are typically not routed beyond that network segment.

Submenu

Submenu for Displaying IPv6 Address (read only)

Block name of IPv6 address	Value	Description	Range
-b1-	----	Hexadecimal value of the 1 st block of the IPv6 address	Cannot be edited
-b2-	----	Hexadecimal value of the 2 nd block of the IPv6 address	Cannot be edited
-b3-	----	Hexadecimal value of the 3 rd block of the IPv6 address	Cannot be edited
-b4-	----	Hexadecimal value of the 4 th block of the IPv6 address	Cannot be edited
-b5-	----	Hexadecimal value of the 5 th block of the IPv6 address	Cannot be edited
-b6-	----	Hexadecimal value of the 6 th block of the IPv6 address	Cannot be edited

Block name of IPv6 address	Value	Description	Range
- b 7 -	- - - -	Hexadecimal value of the 7 th block of the IPv6 address	Cannot be edited
- b 8 -	- - - -	Hexadecimal value of the 8 th block of the IPv6 address	Cannot be edited

7.18. Autoconfiguration SLAAC

Navigation

Menu:

Item:

Available values:

submenu for displaying IPv6 address

Description

Adress autoconfiguration (SLAAC) is an IPv6 address configuration method that enables devices to automatically assign and configure their IPv6 addresses based on information provided in router advertisement messages. It simplifies the process of IP address assigment in IPv6 networks and is a fundamental part of the IPv6 addressing architecture.

Submenu

Submenu for Displaying IPv6 Address (read only)

Block name of IPv6 address	Value	Description	Range
- b 1 -	- - - -	Hexadecimal value of the 1 st block of the IPv6 address	Cannot be edited
- b 2 -	- - - -	Hexadecimal value of the 2 nd block of the IPv6 address	Cannot be edited
- b 3 -	- - - -	Hexadecimal value of the 3 rd block of the IPv6 address	Cannot be edited
- b 4 -	- - - -	Hexadecimal value of the 4 th block of the IPv6 address	Cannot be edited
- b 5 -	- - - -	Hexadecimal value of the 5 th block of the IPv6 address	Cannot be edited
- b 6 -	- - - -	Hexadecimal value of the 6 th block of the IPv6 address	Cannot be edited
- b 7 -	- - - -	Hexadecimal value of the 7 th block of the IPv6 address	Cannot be edited
- b 8 -	- - - -	Hexadecimal value of the 8 th block of the IPv6 address	Cannot be edited

7.19. First Address from DHCPv6

Navigation

Menu:

Item:

Available values:

submenu for displaying IPv6 address

Description

In DHCPv6, the first address that a client typically requests is an IPv6 address for its network interface.

Submenu

Submenu for Displaying IPv6 Address (read only)

Block name of IPv6 address	Value	Description	Range
-b1-	----	Hexadecimal value of the 1 st block of the IPv6 address	Cannot be edited
-b2-	----	Hexadecimal value of the 2 nd block of the IPv6 address	Cannot be edited
-b3-	----	Hexadecimal value of the 3 rd block of the IPv6 address	Cannot be edited
-b4-	----	Hexadecimal value of the 4 th block of the IPv6 address	Cannot be edited
-b5-	----	Hexadecimal value of the 5 th block of the IPv6 address	Cannot be edited
-b6-	----	Hexadecimal value of the 6 th block of the IPv6 address	Cannot be edited
-b7-	----	Hexadecimal value of the 7 th block of the IPv6 address	Cannot be edited
-b8-	----	Hexadecimal value of the 8 th block of the IPv6 address	Cannot be edited

7.20. Manually Set IPv6 Address

Navigation

Menu:

Item:

Available values:

submenu for displaying IPv6 address

Description

Here you can view manually set IPv6 address which has been set in other way, e.g. web interface.

Submenu

Submenu for Displaying IPv6 Address (read only)

Block name of IPv6 address	Value	Description	Range
-b1-	----	Hexadecimal value of the 1 st block of the IPv6 address	Cannot be edited
-b2-	----	Hexadecimal value of the 2 nd block of the IPv6 address	Cannot be edited
-b3-	----	Hexadecimal value of the 3 rd block of the IPv6 address	Cannot be edited
-b4-	----	Hexadecimal value of the 4 th block of the IPv6 address	Cannot be edited
-b5-	----	Hexadecimal value of the 5 th block of the IPv6 address	Cannot be edited
-b6-	----	Hexadecimal value of the 6 th block of the IPv6 address	Cannot be edited
-b7-	----	Hexadecimal value of the 7 th block of the IPv6 address	Cannot be edited
-b8-	----	Hexadecimal value of the 8 th block of the IPv6 address	Cannot be edited

7.21. Prefix for Manually Set IPv6 Address

Navigation

Menu:

Item:

Available values:

submenu for displaying IPv6 address

Description

Prefix is a portion of the IPv6 address that represents the network segment to which the device or network interface belongs.

Submenu

Submenu for Displaying IPv6 Address (read only)

Block name of IPv6 address	Value	Description	Range
- b 1 -	- - - -	Hexadecimal value of the 1 st block of the IPv6 address	Cannot be edited
- b 2 -	- - - -	Hexadecimal value of the 2 nd block of the IPv6 address	Cannot be edited
- b 3 -	- - - -	Hexadecimal value of the 3 rd block of the IPv6 address	Cannot be edited
- b 4 -	- - - -	Hexadecimal value of the 4 th block of the IPv6 address	Cannot be edited
- b 5 -	- - - -	Hexadecimal value of the 5 th block of the IPv6 address	Cannot be edited
- b 6 -	- - - -	Hexadecimal value of the 6 th block of the IPv6 address	Cannot be edited
- b 7 -	- - - -	Hexadecimal value of the 7 th block of the IPv6 address	Cannot be edited
- b 8 -	- - - -	Hexadecimal value of the 8 th block of the IPv6 address	Cannot be edited

7.22. Gateway from Autoconfiguration SLAAC

Navigation

Menu:

Item:

Available values:

submenu for displaying IPv6 address

Description

Gateway in context of SLAAC is a critical network device that provides essential routing information to IPv6 devices. It is responsible for announcing the network's prefix and prefix length, allowing devices to configure their IPv6 addresses automatically.

Submenu

Submenu for Displaying IPv6 Address (read only)

Block name of IPv6 address	Value	Description	Range
- b 1 -	- - - -	Hexadecimal value of the 1 st block of the IPv6 address	Cannot be edited

Block name of IPv6 address	Value	Description	Range
- b 2 -	- - - -	Hexadecimal value of the 2 nd block of the IPv6 address	Cannot be edited
- b 3 -	- - - -	Hexadecimal value of the 3 rd block of the IPv6 address	Cannot be edited
- b 4 -	- - - -	Hexadecimal value of the 4 th block of the IPv6 address	Cannot be edited
- b 5 -	- - - -	Hexadecimal value of the 5 th block of the IPv6 address	Cannot be edited
- b 6 -	- - - -	Hexadecimal value of the 6 th block of the IPv6 address	Cannot be edited
- b 7 -	- - - -	Hexadecimal value of the 7 th block of the IPv6 address	Cannot be edited
- b 8 -	- - - -	Hexadecimal value of the 8 th block of the IPv6 address	Cannot be edited

7.23. MAC Address

Navigation

Menu:

Item:

Available values:

submenu for displaying MAC address

Description

MAC address (**M** edia **A** ccess **C** ontrol) is unique identifier assigned to a network interface card or controller in a device. It serves as a hardware address that distinguishes one network device from another on local network.

Submenu

Only last two octet can be defined under special conditions; conditions not yet set.

Submenu for Displaying MAC Address

Item	Description	Values
L 1:00	1 st octet of MAC address	0x00
L 2:16	2 nd octet of MAC address	0x16
L 3:91	3 rd octet of MAC address	0x91
L 4:Fd	4 th octet of MAC address	0xFD, 0xFD

Item	Description	Values
L5:00 – FF	5 th octet of MAC address	0x00–0xFF
L6:00 – FF	6 th octet of MAC address	0x00–0xFF

8 Sensor Settings

The display shows following:

Enter digital clock's main menu and navigate to SEN1 or SEN2 submenu. Enter by pressing the PB2L push-button or the OK button on the remote controller.

Use SEN1 to configure Sensor 1 and SEN2 to configure Sensor 2.

For consistency, the navigation menu throughout this user guide uses SEN1.

Sensor Settings Summary

Menu Item	Description	Value(s)
t1	Sensor Type	P3, P2, P1, -, 0 •, 1, 2, 3, 4, 5, 6, 7, 13, 14, 15
t2	Displayed Temperature Correction	ct *
t3	Temperature Units Display	0, 1 •
t4	Temperature Units	°C •, °F
t6	Displayed Humidity Correction	cH *
t7	Humidity Units Display	0, 1 •
t8	Humidity Units	rH •, Hr
10	Displayed Pressure Correction	cP *
11	Pressure Units Display	0, 1 •
12	Pressure Units	hP •
14	Temperature Preset Value	Pt *
15	Humidity Preset Value	PH *
16	Pressure Preset value	PP *
17	Input Number for Sensor One-Wire	1 •, 2
22	Communication Protocol Type	1, 2
23	IP Address	IP *

Default values are indicated with •, e.g., 1 •.
Values with * have an accessible submenu, e.g., 1P *.

8.1. Sensor Type

Navigation

Menu:

Item:

Available values:

P3, P2, P1, -, 0, 1, 2, 3, 4, 5, 6, 7, 13, 14, 15

Description

There are numerous sensor types, each optimized for particular application.

Available Settings

Value	Sensor Type
P3	TPHB preset value
P2	TPH preset value
P1	TP preset value
-	No sensor
0 (default value)	TP 3m / TP 15m / TP 30m
1	TPH 1m
2 [1]	TP LAN
3 [1]	TP LAN PoE
4 [1]	TPHP LAN
5 [1]	TPHP LAN PoE
6 [1]	TPH PoE
7 [1]	TPHB LAN
13 [1]	TP Shared
14 [1]	TPH Shared
15 [1]	TPHB Shared

1 only with NTP, PoE, WiFi or WiFi5 variant

8.2. Input Number for Sensor One-Wire

Navigation

Menu:

Item:

Available values:

1 , 2

Available Settings

Value(s)	Description
1 (default value)	Input TEMP1
2	Input TEMP2

8.3. Temperature Sensor

8.3.1. Displayed Temperature Correction

Navigation

Menu:

Item:

Available values:

ct (submenu)

Description

This setting ensures accuracy and reliability of displayed temperature. Temperature sensors may have inherent innaccuracies or drift over time.

Submenu

Submenu ct for setting the temperature correction

Value(s)	Description	Range
- d.d	Setting of the displayed temperature correction on display	- = negative value d.d = value of correction set digit by digit, the range of each digit is 0–9 Range: -9.9 to 9.9 °C

8.3.2. Temperature Units Display

Navigation

Menu:

Item:

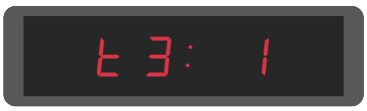

Available values:

0 , 1

Available Settings

Value(s)	Description
0	Disabled (no units displayed)
1 (default value)	Enabled (units displayed)

8.3.3. Temperature Units

Navigation

Menu:

Item:

Available values:

°C , °F

Description

Temperature sensor units are degrees Celsius or Fahrenheit.

The Celsius scale is widely used for measuring temperature in most of the world. It is based on the freezing point (0 °C) and boiling point (100 °C) of water under standard atmospheric pressure at sea level. It is the default unit used for temperature sensors.

The Fahrenheit scale is mainly used in the United States. It is based on the freezing point (32 °F) and boiling point (212 °F) of water under standard atmospheric pressure at sea level.

Available Settings

Value(s)	Description
°C (default units)	Celsius degrees
°F	Fahrenheit degrees

8.3.4. Temperature Preset Value

Navigation

Menu:

Item:

Available values:

Pt (submenu)

Description

The sensor preset value ensures that your defined value is displayed, regardless of the sensor reading or even if the sensor is not connected at all.

Here you can set the preset temperature value.

Submenu

Submenu Pt for Setting the Preset Temperature Value

Value(s)	Description	Range
ddd	Setting of the preset temperature value	dd.d = preset value set digit by digit, the range of each digit is 0–9 Range: -99 to 999

8.4. Humidity Sensor

8.4.1. Displayed Humidity Correction

Navigation

Menu:

Item:

Available values:

cH (submenu)

Description

This setting ensures accuracy and reliability of displayed humidity. Humidity sensors may have inherent innaccuracies or drift over time.

Submenu

Submenu cH for Setting the Humidity Correction

Value(s)	Description	Range
-d.d	Setting of the displayed humidity correction on display	- = negative value d.d = value of correction set digit by digit, the range of each digit is 0–9 Range: -9.9 to 9.9

8.4.2. Humidity Units Display

Navigation

Menu:

Item:

Available values:

0, 1

Available Settings

Value(s)	Description
0	Disabled (no units displayed)
1 (default value)	Enabled (units displayed)

8.4.3. Humidity Units

Navigation

Menu:

Item:

Available values:

rH, Hr

Description

Humidity is represented in relative humidity units (rh or Hr). Relative humidity is the most common unit for expressing humidity levels. It represents the amount of water vapor in the air as a percentage of the maximum amount of water vapor the air can hold at a given temperature and pressure.

Relative humidity values range from 0% (completely dry air) to 100% (saturated air, where the air cannot hold any more moisture).

Available Settings

Value(s)	Description
rH (default unit)	Relative humidity
Hr	

8.4.4. Humidity Preset Value

Navigation

Menu:

Item:

Available values:

PH (submenu)

Description

The sensor preset value ensures that your defined value is displayed, regardless of the sensor reading or even if the sensor is not connected at all.

Here you can set the preset humidity value.

Submenu

Submenu PH for Setting the Preset Humidity Value

Value(s)	Description	Range
dd	Setting of the preset humidity value	dd.d = preset value set digit by digit, the range of each digit is 0–9 Range: -99 to 99

8.5. Pressure Sensor

8.5.1. Displayed Pressure Correction

Navigation

Menu:

Item:

Available values:

cP (submenu)

Description

This setting ensures accuracy and reliability of displayed pressure. Pressure sensors may have inherent innaccuracies or drift over time.

Submenu

Submenu c P for Setting the Pressure Correction

Value(s)	Description	Range
- d d d	Setting of the displayed pressure correction on display	- = negative value d d d = value of correction set digit by digit, the range of each digit is 0–9 Range: -999 to 999

8.5.2. Pressure Units Display

Navigation

Menu:

Item:

Available values:

0 , 1

Available Settings

Value(s)	Description
0	Disabled (no units displayed)
1 (default value)	Enabled (units displayed)

8.5.3. Pressure Units

Navigation

Menu:

Item:

Available values:

hP

Description

Pressure is a measure of the force applied to a given area. The default pressure sensor unit is Hectopascal (hPa, on sensor it is displayed as h P). It is equivalent to 100 Pa.

It is useful for expressing air pressure at various altitudes and for tracking changes in atmospheric pressure that can indicate weather patterns.

Available Setting

Value(s)	Description
hP	Hectopascal

8.5.4. Pressure Preset value

Navigation

Menu:

Item:

Available values:

PP (submenu)

Description

The sensor preset value ensures that your defined value is displayed, regardless of the sensor reading or even if the sensor is not connected at all.

Here you can set the preset pressure value.

Submenu

Submenu PP for Setting the Preset Pressure Value

Value(s)	Description	Range
dddd	Setting of the preset pressure value	dd.d = preset value set digit by digit, the range of each digit is 0–9 Range: 0 to 9999

8.6. LAN Sensor

Available only with NTP, PoE, WiFi or WiFi5 variant.

8.6.1. Communication Protocol Type

Navigation

Menu:

Item:

Available values:

1, 2

Description

Type of communication protocol for LAN sensors depends on the specific requirements of the sensors and the network infrastructure in use.

Available Settings

Value(s)	Description
1	Modbus
2	Spinel

8.6.2. IP Address

Navigation

Menu:

Item:

Available values:

IP (submenu)

Description

An IP address (**I** nternet **P** rotocol address) is a unique numerical label assigned to each device connected to network that uses Internet protocol for communication.

IP addresses serve as identifiers, allowing devices to send and receive data to and from one another across a network.

Here you can set the IP address of sensor.

Submenu

Submenu IP for Displaying and Editing IPv4 Address

Value	Description	Range
A	1 st octet IPv4 address	0–255, set digit by digit
b	2 nd octet IPv4 address	0–255, set digit by digit
C	3 rd octet IPv4 address	0–255, set digit by digit
d	4 th octet IPv4 address	0–255, set digit by digit

9 Stopwatch Settings

The display shows following:

Enter digital clock's main menu and navigate to StoP submenu. Enter by pressing the PB2L push-button or the OK button on the remote controller.

Stopwatch Settings Summary

Menu Item	Description	Value(s)
PrE5	Stopwatch Start Time	*
Endt	Stopwatch End Time (New since version r 8.17)	*
h1	Counting Direction	1•, 2, 3, 4
h2	Control Mode	1•, 2, 3, 4, 5, 6, 7, 8
h3	Counting Unit	1•, 2, 3, 4
h4	Contact Closing	0•, 1 – 30, C, L
h6	External Keyboard Connection	0•, 1
h7	Timeout to Switch to Default Display for BRB	0•, 1 – 99
h8	External Button Input 1 Active Level	0•, 1
h9	External Button Input 2 Active Level	0•, 1
10	Blinking Enable	0•, 1
11	Blink Period	5 – 50
12	Blink Duty	10 – 90
PrE2	Stopwatch Start Time (2nd Input)	*

Default values are indicated with •, e.g., 1•.
Values with * have an accessible submenu, e.g., 1P *.

9.1. Stopwatch Start Time

Navigation

Menu:	Item:	Available values:
		submenu

Description

This setting is crucial for setting the stopwatch start time for downwards counting.

Submenu

Submenu for Setting the Stopwatch Start Time

Displayed Item	Value(s)	Description	Range
`HH:MM`	`HH`	Hour setting	Range 0–99
	`MM`	Minute setting	Range 0–59
`SS.HsHs`	`SS`	Seconds setting	Range 0–59
	`HsHs`	1/100 second setting	Range 0–99

The available time settings depend on the selected counting unit (menu item `h3`). According to the set counting unit, some fields are disabled and shown as dashes (`- -`).

- If `h3:1` (1/100 second unit) is set: setting format `HH:MM` and `SS.HsHs` , maximum `99:59:59.990` .
- If `h3:2` (second unit) is set: setting format `HH:MM` and `SS.--` , maximum `99:59:59.000` .
- If `h3:3` (minute unit) is set: setting format `HH:MM` and `--.--` , maximum `99:59:00.000` .
- If `h3:4` (day unit) is set: setting format `DD:DD` and `--.--` , maximum `9999` days.
  Days are set as first two-digit field × 100 + second two-digit field.

9.2. Stopwatch End Time

Added in version r8.17.

Navigation

Menu:	Item:	Available values:
		submenu

Description

This setting defines the end time for upwards counting. The stopwatch stops when the set time is reached.

If relay activation (menu item h 4) is enabled, the relay is switched on for the defined duration at that moment.

Submenu

Submenu for Setting the Stopwatch End Time

Displayed Item	Value(s)	Description	Range
HH:MM	HH	Hour setting	Range 0–99
	MM	Minute setting	Range 0–59
SS.HsHs	SS	Seconds setting	Range 0–59
	HsHs	1/100 second setting	Range 0–99

The default end time is set to 99:59:59.990 .

The available time settings depend on the selected counting unit (menu item h 3). According to the set counting unit, some fields are disabled and shown as dashes (- -).

- If h 3: 1 (1/100 second unit) is set: setting format HH:MM and SS.HsHs , maximum 99:59:59.990 .
- If h 3:2 (second unit) is set: setting format HH:MM and SS.-- , maximum 99:59:59.000 .
- If h 3:3 (minute unit) is set: setting format HH:MM and --.-- , maximum 99:59:00.000 .
- If h 3:4 (day unit) is set: setting format DD:DD and --.-- , maximum 9999 days.
  Days are set as first two-digit field × 100 + second two-digit field.

9.3. Counting Direction

Navigation

Menu:

Item:

Available values:

1 , 2 , 3 , 4

Description

Stopwatch counting direction refers to wheter it counts upwards or downwars (with stop at zero or with automatic restart from specified time value or keeping the count into negative values).

Available Settings

Value	Description
1 (default value)	Upwards
2	Downwards from a set time value, with stop at zero

Value	Description
3	Downwards from a set time value, with automatic restart from specified time value
4	Downwards from a set time value, until zero and keeping the count into negative values

9.4. Control Mode

Navigation

Menu:

Item:

Available values:

1, 2, 3, 4, 5, 6, 7, 8, 9

Available Settings

Value	Description
1 (default value)	Control Mode 1
2	Control Mode 2
3	Control Mode 3
4	Control Mode 4
5	Control Mode 5
6	Control Mode 6
7	Control Mode 7
8	Control Mode 8
9	Control Mode 9

9.4.1. Control Mode 1

Remote controller button	Push-button	Function
S/S	PB3	Altering START - STOP - UNFREEZE of display (if freezed display)
HOLD	PB1	FREEZE of displayed data with the counter proceeding in counting
RESET	PB1L	Setting the counter to zero in STOP operating mode for counting up, or return to a preset value in all other counting directions

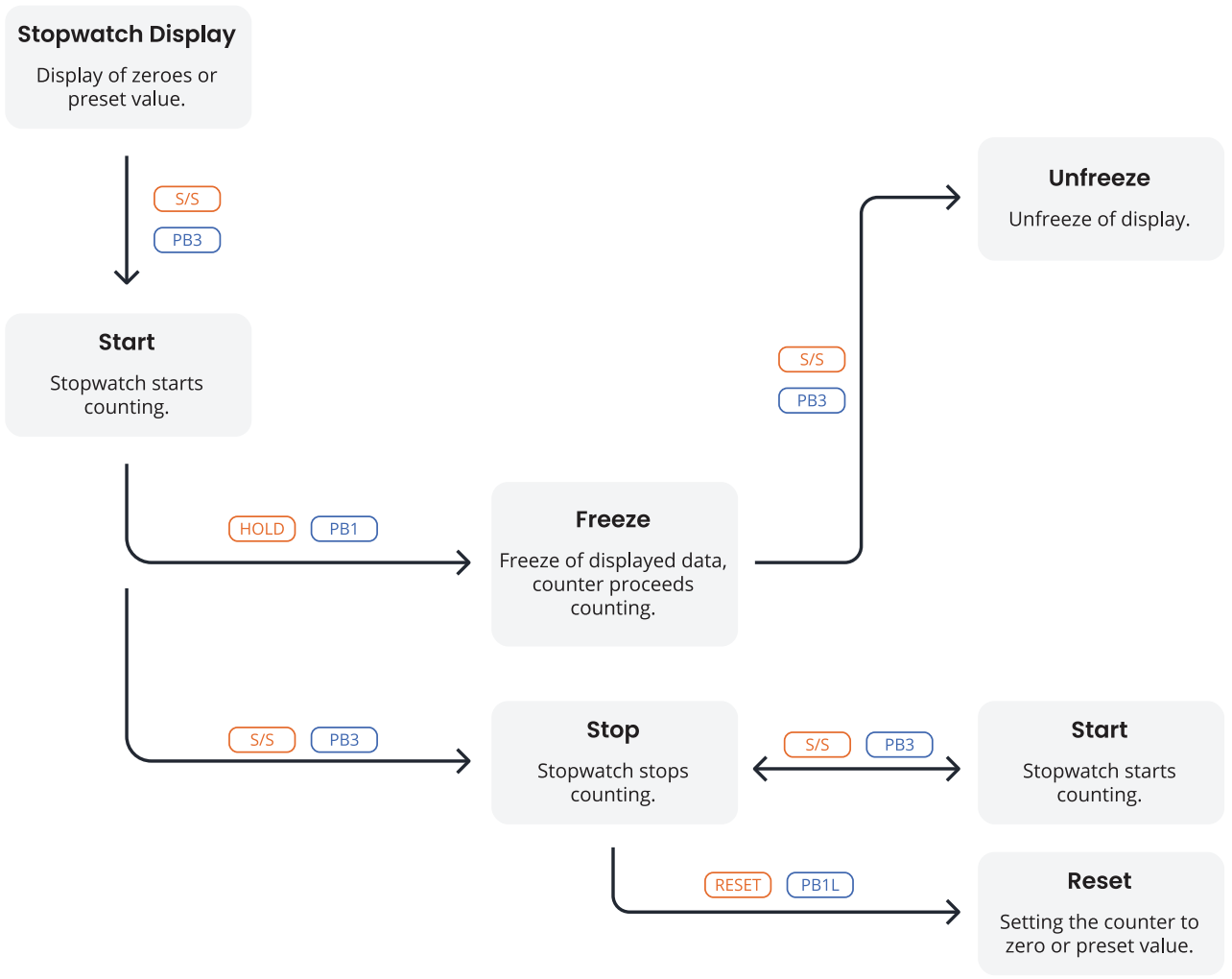

9.4.2. Control Mode 2

Remote controller button	Push-button	Function
S/S	PB3	Altering START - STOP - UNFREEZE of display (if freezed display)
HOLD	PB1	First press of push-button causes the display to freeze on the respective time achieved and lets counter running; further activation of push-button shows the intermediate time elapsed from the first press
RESET	PB1L	Reset of the counter in the STOP mode while in counting up, return to preset value in other counting modes

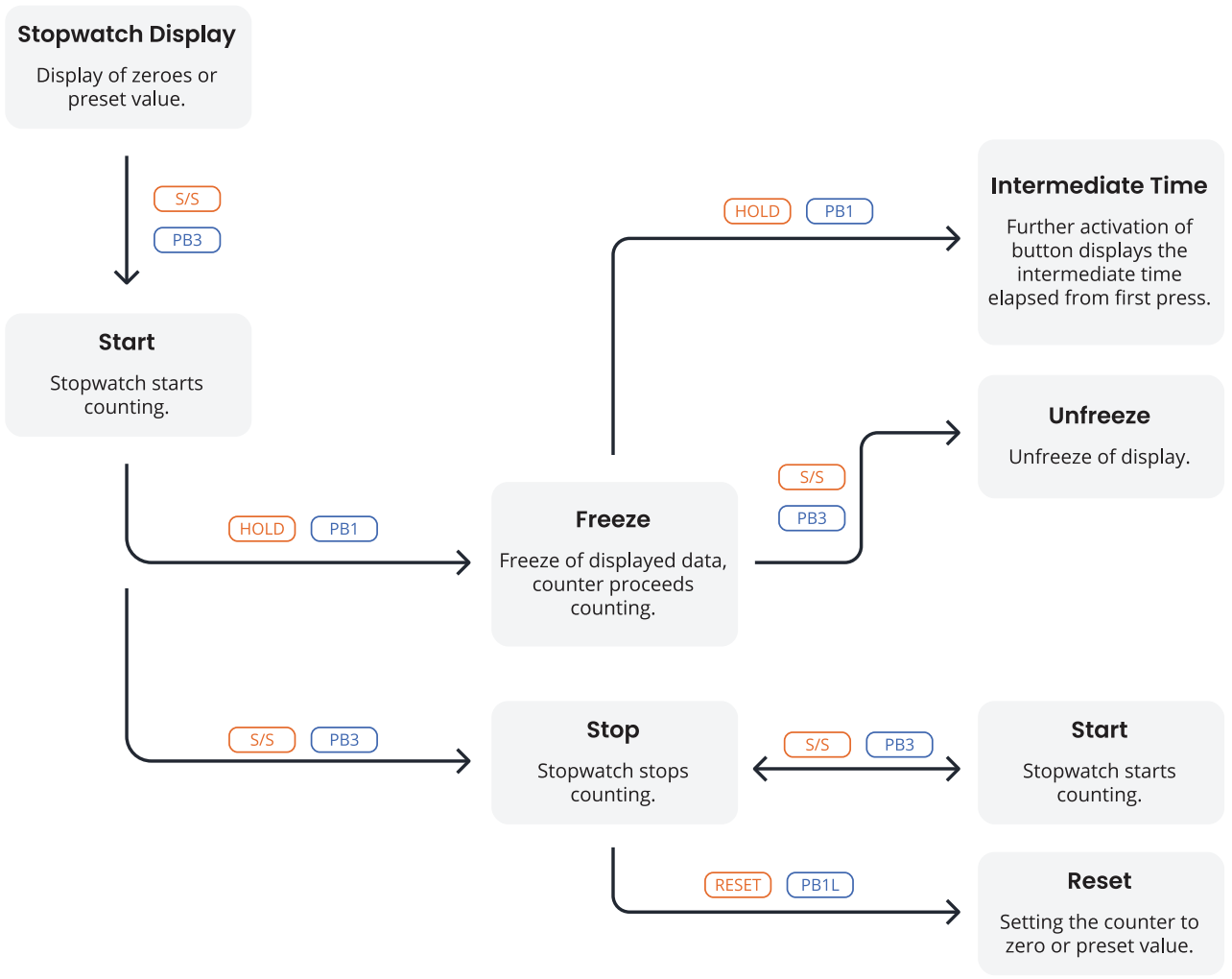

9.4.3. Control Mode 3

Remote controller button	Push-button	Function
S/S	PB3	Count up from zero or from preset value in countdown mode, next press of push-button causes the display to freeze and to resume the count from zeroin counting up or from preset value in countdown mode
HOLD	PB1	Unfreeze of display, leaving the counter continue in counting
RESET	PB1L	Counter reset to zero or return to preset value followed with counter stop

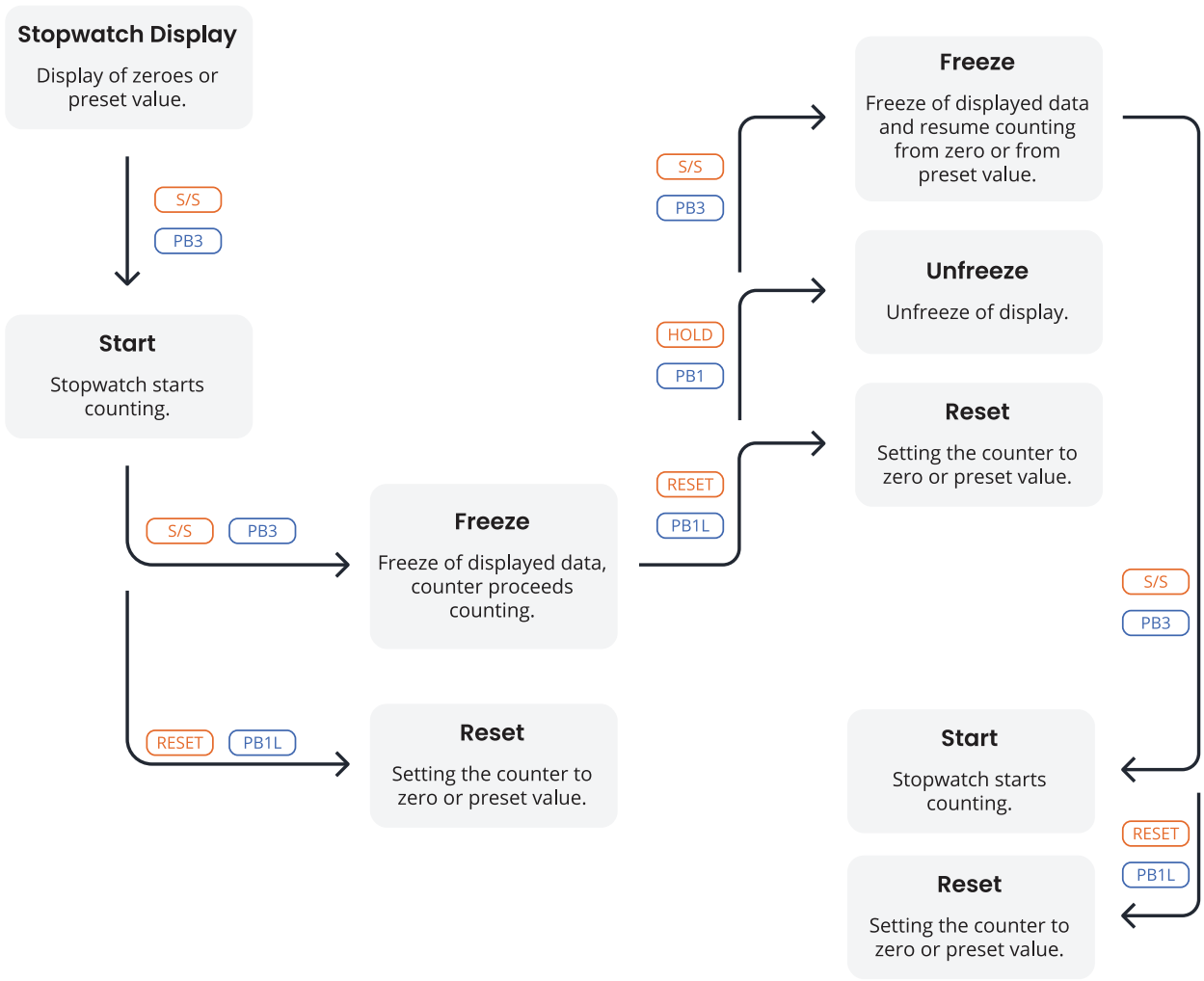

9.4.4. Control Mode 4

Remote controller button	Push-button	Function
S/S	PB3	Triggering the counter
HOLD	PB1	Stopping the counter
RESET	PB1L	Resetting the counter or return to preset value with counter stop

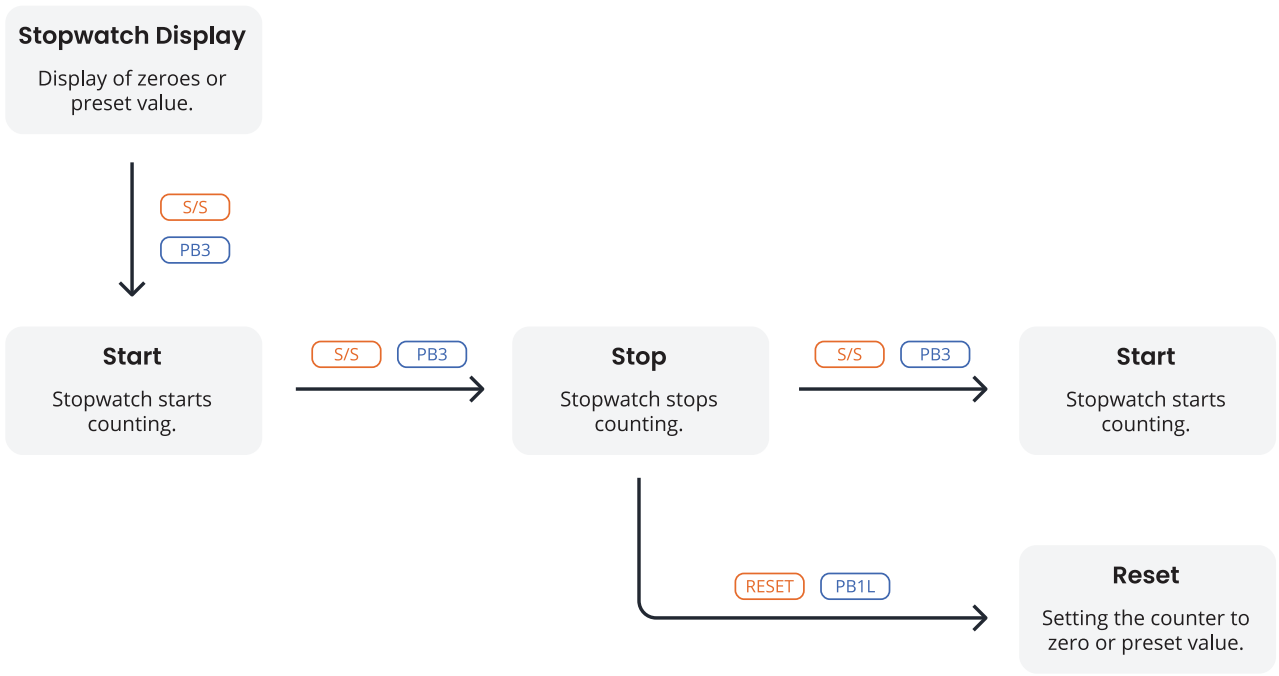

9.4.5. Control Mode 5

Remote controller button	Push-button	Function
S/S	BRB10	Alternately: 1. Start 2. Stop 3. Reset

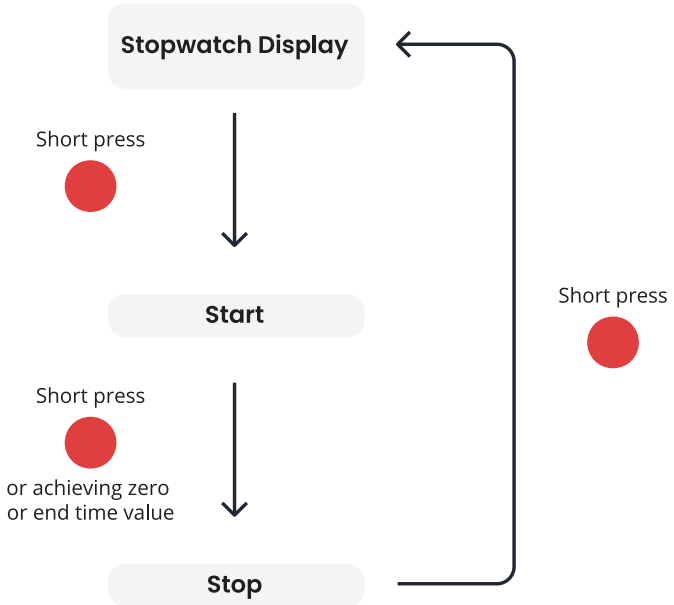

9.4.6. Control Mode 6

Remote controller button	Push-button	Function
S/S	BRB10	Alternately: 1. Stopwatch display + Start 2. Stop 3. Default display + Reset

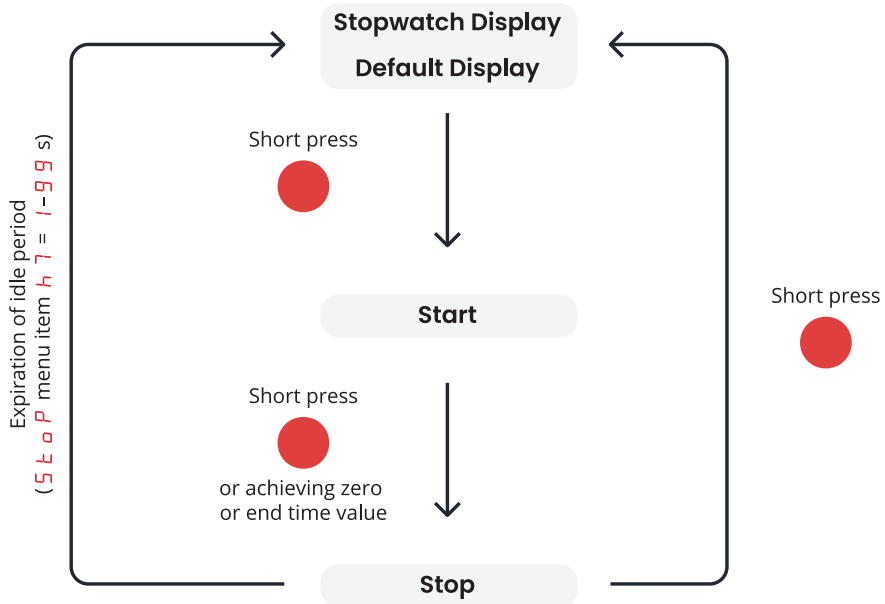

If the expiration of idle period (item h7) is set to value 0 , the display will switch to default display **immediately** .

Default display can be set in the dISP menu item d3 (chapter Time Constants for Automatic Data Switching Over):

1. **Display OFF**
   If the dISP menu item d3 is set to value 4 (continuous display of stopwatch), the display will switch OFF after the expiration of idle period or short press of button.
2. **Display Time, Date or Temperature**
   If the dISP menu item d3 is set to value 0 , 1 , 2 , 3 , 5 , 6 or U , the display will switch to either Time, Date or Temperature display after a expiration of idle period or short press of button.

9.4.7. Control Mode 7

Remote Controller Button	Push-button	Function
S/S	PB1 (press and hold)	After pressing and holding down the PB1 button or alternatively pressing the S/S remote control button, the stopwatch will start counting

Remote Controller Button	Push-button	Function
		After reaching zero or end time value, the stopwatch will stop counting If the menu item h4 is set to value 1 – 30 or L , the relay contact will close
RESET		After releasing the PB1 button or alternatively pressing the RESET remote control button, the stopwatch will reset, and the relay contact will open if closed

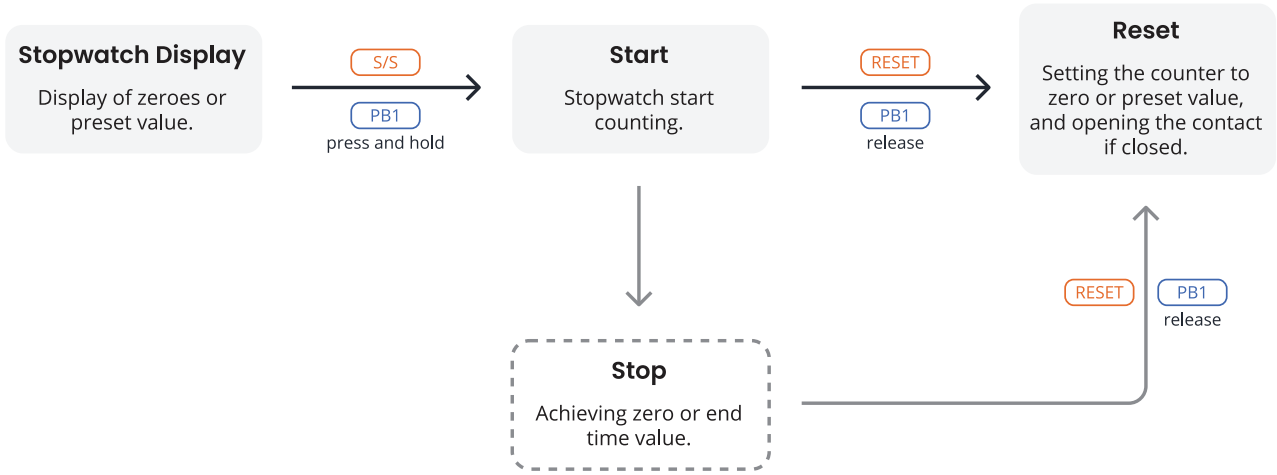

For easy control, you can connect any external contact (e.g. relay controlled by external device) to TEMP connector.

For more information about connecting, see BRB10 Connection chapter.

9.4.8. Control Mode 8

Signal		Function
TEMP1	*activated*	The stopwatch starts countdown 1
	deactivated	The stopwatch stops countdown 1 (and countdown 2 if active) and switches to default display
TEMP2	*activated*	The stopwatch starts countdown 2 (the signal on TEMP1 **must be active**)
	deactivated	–

The stopwatch may or may not finish countdown 1 (display of 00:00) in order to start countdown 2. As soon as the signal on TEMP2 is activated, the countdown 2 starts.

If the signal on TEMP1 is deactivated, both countdowns stop and the default display is displayed.

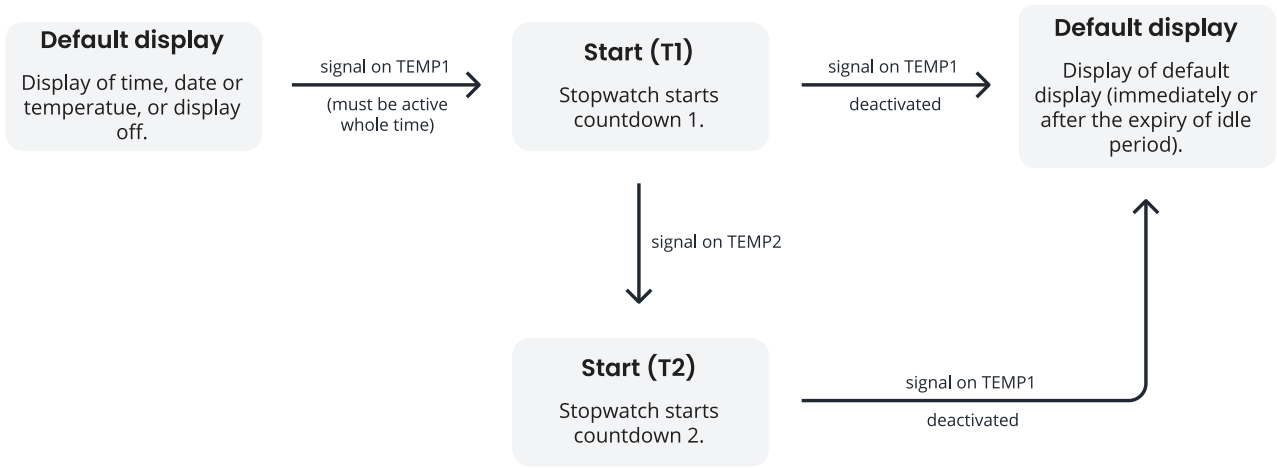

If the expiration of idle period (item h 7) is set to value 0 , the display will switch to default display **immediately** .

Default display can be set in the d I S P menu item d 3 (chapter Time Constants for Automatic Data Switching Over):

1. **Display OFF**

   If the d I S P menu item d 3 is set to value 4 (continuous display of stopwatch), the display will switch OFF after the expiration of idle period or short press of button.

2. **Display Time, Date or Temperature**

   If the d I S P menu item d 3 is set to value 0 , 1 , 2 , 3 , 5 , 6 or U , the display will switch to either Time, Date or Temperature display after a expiration of idle period or short press of button.

9.4.9. Control Mode 9

Signal		Function
TEMP1	*activated*	The stopwatch starts counting
		If the stopwatch reaches zero or the end-time value, it stops counting and waits for the signal to be deactivated
	deactivated	The stopwatch stops counting and switches to the default display, either immediately or after the idle period expires

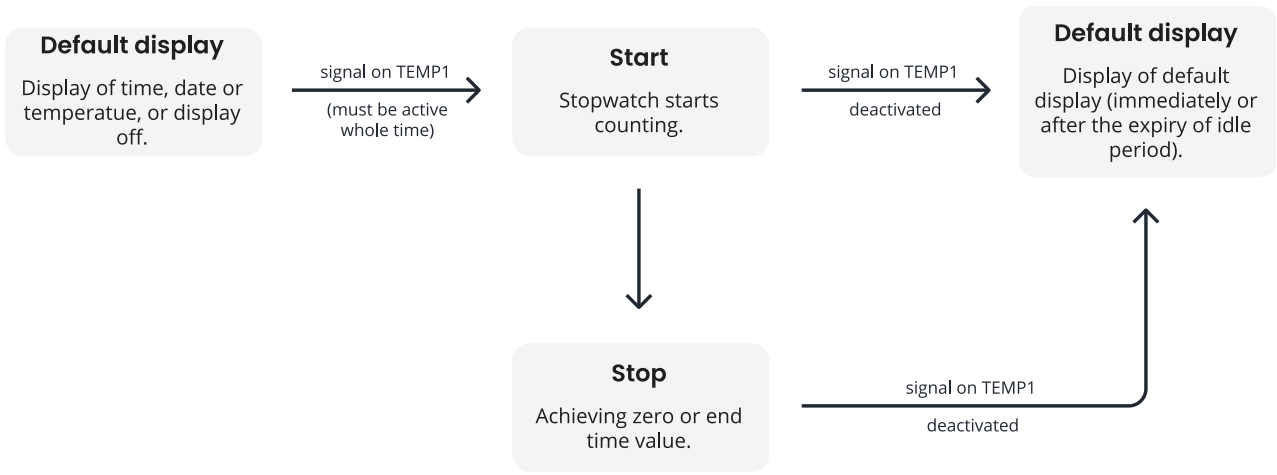

If the expiration of idle period (item h 7) is set to value 0 , the display will switch to default display **immediately** .

Default display can be set in the d 1 5 P menu item d 3 (chapter Time Constants for Automatic Data Switching Over):

1. **Display OFF**
   If the d 1 5 P menu item d 3 is set to value 4 (continuous display of stopwatch), the display will switch OFF after the expiration of idle period or short press of button.
2. **Display Time, Date or Temperature**
   If the d 1 5 P menu item d 3 is set to value 0 , 1 , 2 , 3 , 5 , 6 or U , the display will switch to either Time, Date or Temperature display after a expiration of idle period or short press of button.

9.5. Counting Unit

Navigation

Menu:

Item:

Available values:

1 , 2 , 3 , 4

Description

The stopwatch counting unit determines how time is divided and displayed as the stopwatch runs. The counting unit vary depending on the stopwatch's design and purpose.

Available Settings

Value	Description
1 (default value)	Counting in increments of 1/100 seconds (with 4-digit display the counting goes on until 59.99 seconds and then continues with displaying `MM:SS.` , and then `HH:MM` respectively) Up to 99 hours, 59 minutes and 59.990 seconds

Value	Description
2	Counting in increments of 1 second (with 4-digit display the counting goes on until 59 minutes and 59 seconds and then continues with displaying of `HH:MM`) Up to 99 hours, 59 minutes and 59 seconds
3	Counting in increments of 1 minute Up to 99 hours and 59 minutes
4	Counting in periods after one day subtraction or addition always takes place around midnight Up to 9999 days (when counting is stopped, the dot is displayed after the last digit)

9.6. Contact Closing

This setting is available only with REL option.

Navigation

Menu:

Item:

Available values:

0, 1 – 30, C, L

Description

Stopwatch contact closing is a fundamental operation used in various applications where precise timing is required, such as in sports, scientific experiments, cooking, and many other field.

Available Settings

Value	Description
0 (default value)	Function disabled
1 – 30	Time period of contact for stopwatches in seconds, passing through zero while operating in countdown mode or achieving end time in count-up mode, starting from preset value
C	Contact is closed during active counting
L	Contact closes after passing zero in countdown mode or upon reaching end time in count-up mode, and remains closed until stopwatch reset

9.7. External Keyboard Connection

Navigation

Menu:

Item:

Available values:

0, 1

Available Settings

Value	Description
0 (default value)	Function disabled
1	Connected

If the external keyboard is connected, the TP3/30m and TPHP temperature sensors **cannot be connected** .

9.8. Timeout to Switch to Default Display for BRB

Navigation

Menu:

Item:

Available values:

0, 1 – 99

Description

Here you can set the timeout to switch to default display after pressing the BRB10 button.

Available Settings

Value	Description
0 (default value)	Function disabled
1 – 99	Time in seconds to go to the default display after stopping the stopwatch or reaching the target time

9.9. BRB10 Connection

The BRB10 button is connected via the **NO** contact to the **TEMP** connector.

1. Connect **brown** cable into **–** .

2. Connect **black** cable into **T1** .

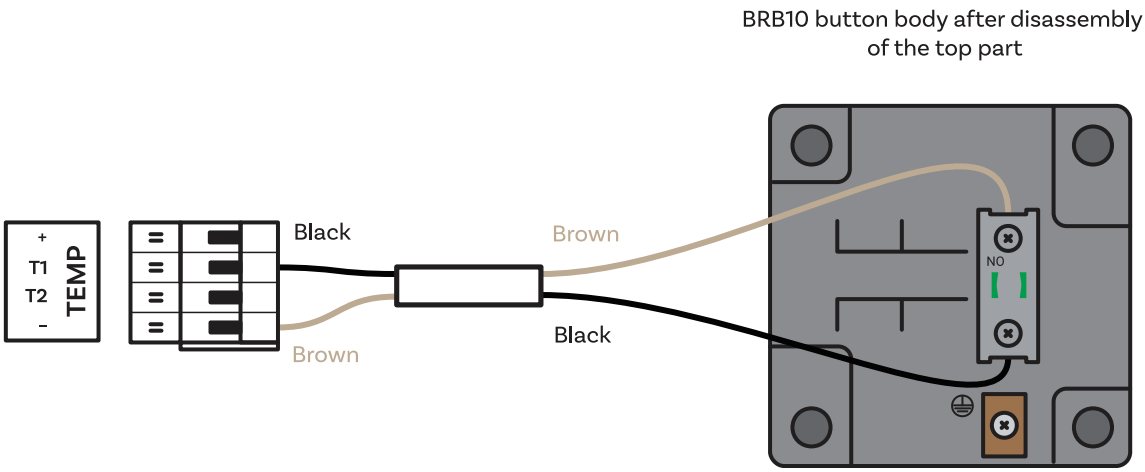

9.10. Stopwatch Start Time (2nd Input)

Navigation

Menu:	Item:	Available values:
		submenu

Description

This setting is available only if stopwatch control mode is set to value h2: 8 .

This setting is for setting the stopwatch start time for downwards counting 2.

Submenu

Submenu for Setting the Stopwatch Start Time

Displayed Item	Value(s)	Description	Range
HH:MM	HH	Hour setting	Range 0–99
	MM	Minute setting	Range 0–59
SS.HsHs	SS	Seconds setting	Range 0–59
	HsHs	1/100 second setting	Range 0–99

The available time settings depend on the selected counting unit (menu item h 3). According to the set counting unit, some fields are disabled and shown as dashes (- -).

- If h 3: 1 (1/100 second unit) is set: setting format `HH:MM` and `SS.HsHs` , maximum `99:59:59.990` .
- If h 3:2 (second unit) is set: setting format `HH:MM` and `SS.--` , maximum `99:59:59.000` .
- If h 3:3 (minute unit) is set: setting format `HH:MM` and `--.--` , maximum `99:59:00.000` .
- If h 3:4 (day unit) is set: setting format `DD:DD` and `--.--` , maximum `9999` days.
  Days are set as first two-digit field × 100 + second two-digit field.

9.11. External Button Input Active Level

These settings configure the active logic level of each external button input independently.

By default, an external button event is triggered by a logic low (LOG0) signal, corresponding to an active-low, contact-close input. Each input can be individually configured to operate in logic high (LOG1) mode, corresponding to an active-high, contact-open or permanent level signal.

This allows both external button inputs to operate simultaneously with different active levels (for example, input 1 active-high and input 2 active-low).

When an input is configured for active-high operation, it is treated as a level-based signal rather than an edge-triggered event. Button events from inputs configured as active-high are processed only on the stopwatch screen. During screen navigation and menu operation, these inputs are ignored to prevent unintended menu navigation caused by a permanent external signal.

9.11.1. External Button Input 1 Active Level

Navigation

Menu:

Item:

Available values:

0 , 1

Available Settings

Value	Description
0 (default value)	Input 1 active low (LOG0)
1	Input 1 active high (LOG1)

9.11.2. External Button Input 2 Active Level

Navigation

Menu:

Item:

Available values:

0, 1

Available Settings

Value	Description
0 (default value)	Input 2 active low (LOG0)
1	Input 2 active high (LOG1)

9.12. Display Blink

This function enables blinking of the stopwatch display while the stopwatch is running.

9.12.1. Blinking Enable

Navigation

Menu:

Item:

Available values:

0, 1

Description

When display blink is enabled, the stopwatch display periodically turns off and on during time counting. This provides a clear visual indication that the stopwatch is active and time measurement is in progress.

When display blink is disabled, the display remains continuously visible during stopwatch operation.

Enabling this function adds additional configuration pages for setting the blink period and duty cycle. These configuration pages are hidden when display blink is disabled.

Available Settings

Value	Description
0 (default value)	Disabled
1	Enabled

9.12.2. Blink Period

Navigation

Menu:

Item:

Available values:

5 – 50

Description

Defines the duration of one complete blinking cycle (ON + OFF).

Available Settings

Value	Description
5 – 50	Total blink cycle duration Unit: 0.1 s Default: 10 (1.0 s)

9.12.3. Blink Duty

Navigation

Menu:

Item:

Available values:

10 – 90

Description

Specifies the proportion of time during which the display is visible within one blinking cycle.

Available Settings

Value	Description
10 – 90	Fraction of period during which display is visible Unit: % Default: 75 %

Period 10 (1000 ms), duty 75 % → display ON 750 ms, display OFF 250 ms

9.13. Code Blue

9.13.1. Connection

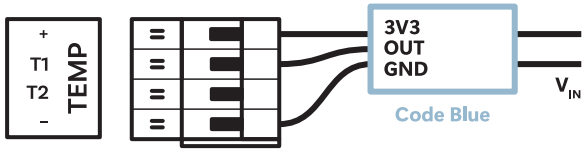

9.13.2. Recommended Settings

Menu Item	Value	Description
h2	9	Control mode 9
h6	1	External keyboard connected
h7	3	Timeout to switch to default display set to 3 sec (recommended)
h8	1	Input 1 active high (LOG1)
10	1	Display blink enabled
11	5 - 50	Blink period as needed
12	10 - 90	Blink duty as needed

10 Time & Date Settings

Use these settings solely for autonomous mode or when utilizing an impulse line.

The display shows following:

Enter digital clock's main menu and navigate to tIME submenu. Enter by pressing the PB2L push-button or the OK button on the remote controller.

Time & Date Settings Summary

Menu Item	Description	Value(s)
HH:MM	Time Setting	*
DD.MM.	Date Setting	*
20YY	Year Setting	*

Values with * have an accessible submenu, e.g., IP *.

10.1. Time

Navigation

Menu:

Item:

Available values:

submenu

Description

Here you can set-up displayed time.

Available Settings

Submenu for Setting Time

Value	Description	Range
HH	Setting of hour	Range 0–23
MM	Setting of minutes	Range 0–59

10.2. Date and Year

10.2.1. Date

Navigation

Menu:

Item:

Available values:

submenu

10.2.2. Year

Navigation

Menu:

Item:

Available values:

submenu

Description

Here you can set-up displayed date and year.

Submenu

Submenu for Setting Date (and Year)

Value	Description	Range
DD	Setting of day	Range 1–31
MM	Setting of month	Range 1–12
YY	Setting of year	Range 0–99

If the set date is out of valid range while saving the set year, it will be automatically corrected. The menu will not be saved, it will return back to the beginning of setting the day and it is necessary to go through the entire setting menu again to confirm or modify the suggested date changes.

11 Power modes

Added in version r7.14.

The display shows following:

Enter digital clock's main menu and navigate to Pour submenu. Enter by pressing the PB2L push-button or the OK button on the remote controller.

The digital clock supports power OFF and power SAVE modes. These are modes where the clock display is turned off to ensure lower power consumption.

Power Modes Summary

Menu Item	Description	Value(s)
P1	Power OFF	0, 1
P2	Power SAVE	0, 1
P3	SAVE Mode Start Time	St *
P4	SAVE Mode End Time	Ed *

Values with * have an accessible submenu, e.g., 1P *.

11.1. Power OFF

Navigation

Menu:

Item:

Available values:

0, 1

Description

This mode ensures that the clock display is permamently off. The clock does not respond to any press of remote controller buttons or push-buttons.

Available Settings

Value(s)	Description
0	No function

Value(s)	Description
1	Immediate switching off of the clock display

Alternatively for IR remote controller , activation of power off mode can be done by long pressing the DISP from **Main screens** (display of time, date, stopwatch, …).

After confirmation, the display will immediately switch to Power OFF mode and turns off. Entry into this mode is indicated by displaying OFF for 1 second.

The mode is exited by long pressing the DISP button on the IR remote controller or by long pressing PB1 or PB2 . The display is then switched on again.

Alternatively, activation can be done via Web interface – Mode Tab .

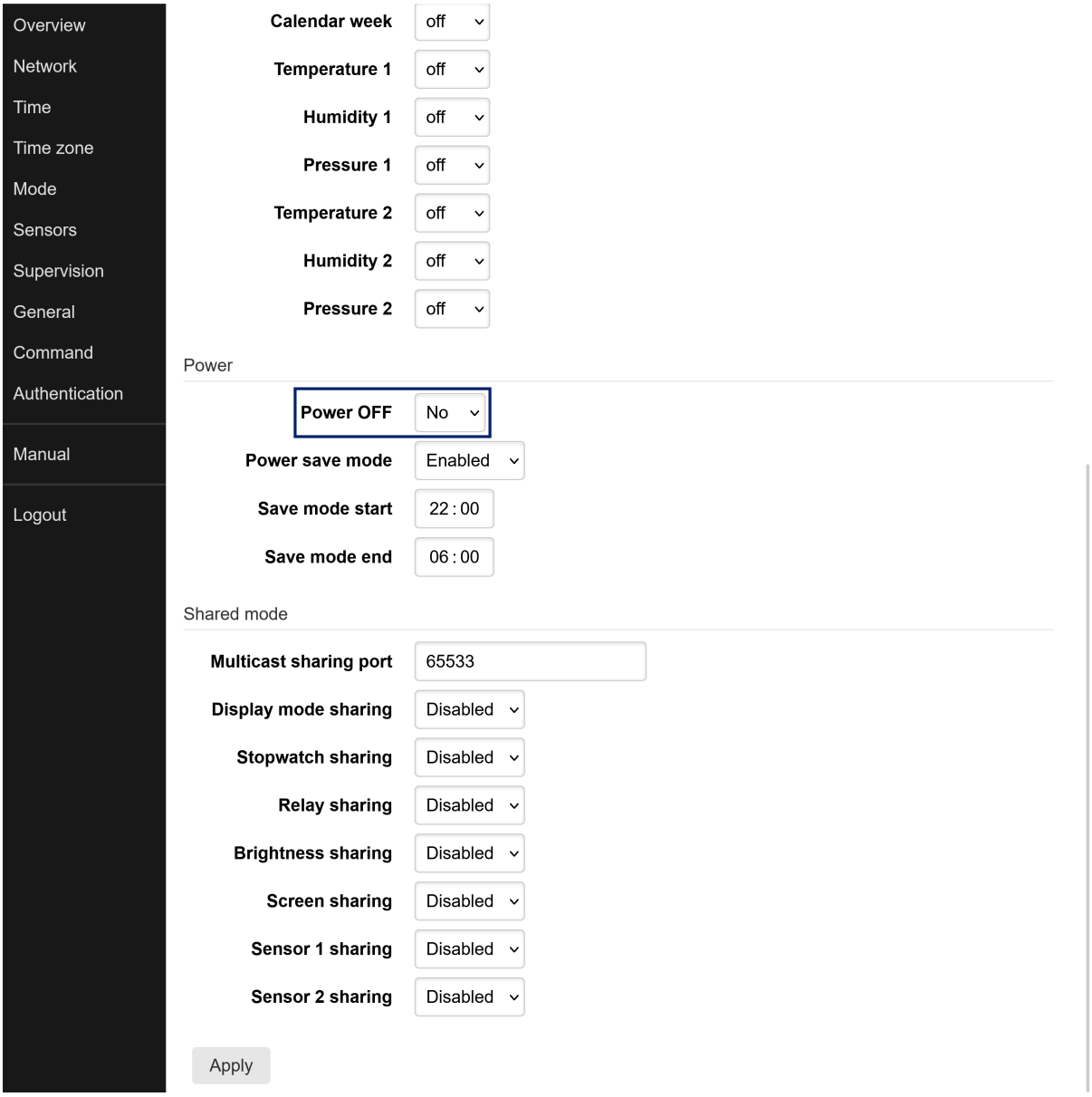

11.2. Power SAVE

Navigation

Menu:

Item:

Available values:

0 , 1

Description

An automatic mode where the clock display is switched off at set time interval. If one of the push-buttons or the IR remote controller is pressed, the display is briefly switched on. At this time the clock can be operated normally.

After *10 seconds* have elapsed since the last press of the button or push-button, the clock display will switch off again.

Entry into this mode is indicated by the display of SLP for *1 second* .

Available Settings

Value(s)	Description
0	Power save mode disabled
1	Power save mode enabled

Alternatively, activation can be done via Web interface – Mode Tab .

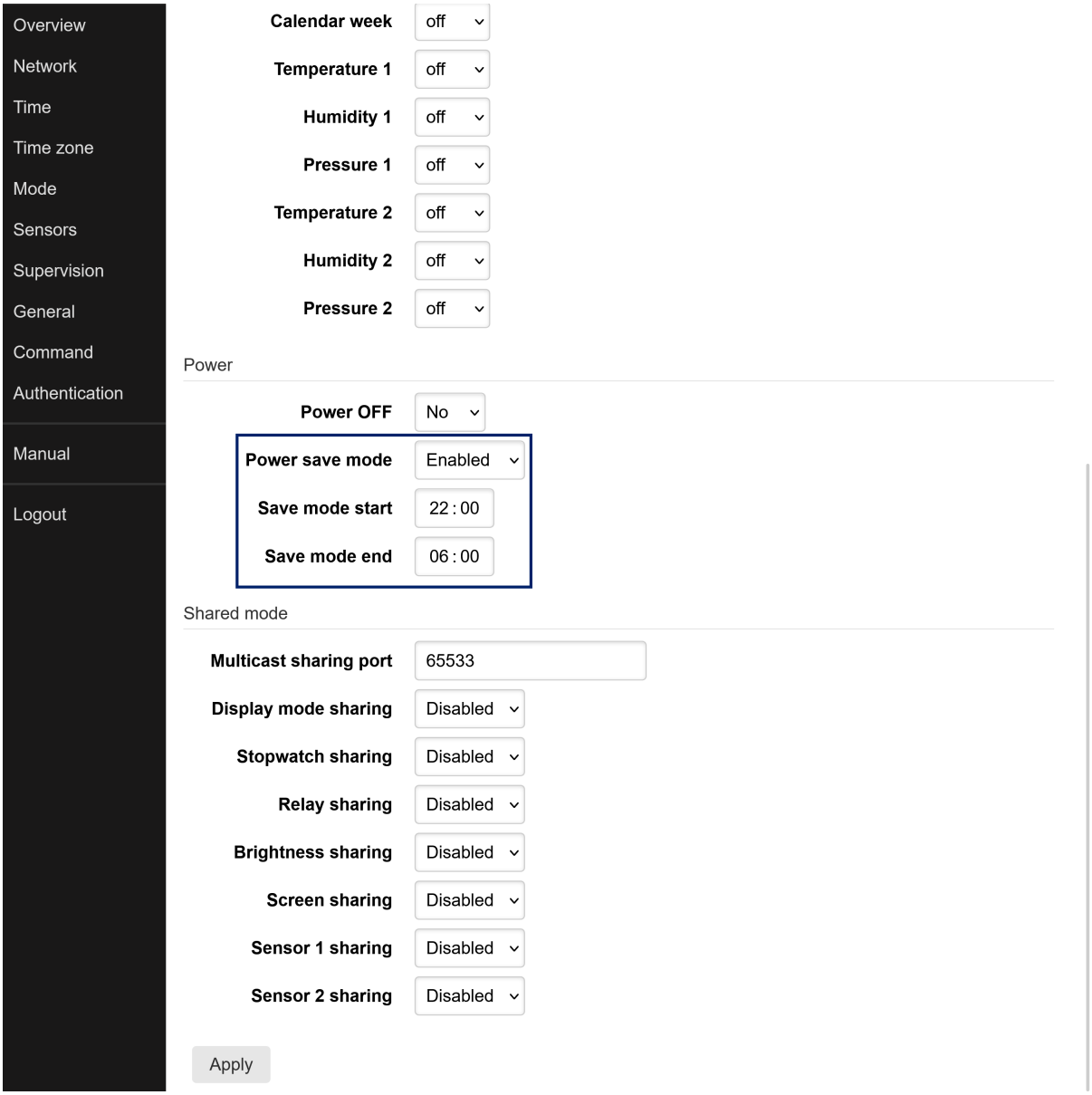

Following start and end time submenus are accessible only if the Power save mode is activated.

11.2.1. SAVE Mode Start Time

Navigation

Menu:	Item:	Available values:
		St (submenu)

Submenu

The Save mode start time can be set by this submenu:

Value(s)	Description	Range
HH	Setting of hour	Range 0–23
MM	Setting of minutes	Range 0–59

11.2.2. SAVE Mode End Time

Navigation

Menu:

Item:

Available values:

Ed (submenu)

Submenu

The Save mode end time can be set by this submenu:

Value(s)	Description	Range
HH	Setting of hour	Range 0–23
MM	Setting of minutes	Range 0–59

12 Share Mode

Added in version r8.0.

Available only for digital clock synchronized by Ethernet variant.

The display shows following:

Enter digital clock's main menu and navigate to ShrE submenu. Enter by pressing the PB2L push-button or the OK button on the remote controller.

The sharing mode allows sharing of certain parameters, values and functions between multiple devices. It is assumed that for each shared parameter, there is one Master device and several Slave devices. The Master device sends the shared values, and Slave devices receive and apply them.

Currently, the following parameters can be shared:

- Display Mode
- Stopwatch
- Relay
- Brightness
- Screen
- Sensor

For an individual parameter, there must not be more than one control device on the common shared channel (UDP port). Otherwise, the subordinate clocks will display incorrect information or it may lead to erroneous behavior.

Share Mode Settings Summary

Menu Item	Description	Value(s)
E1	UDP Port Setting	Pt *
E2	Sharing Display Mode (Default Display, Stopwatch)	0, 1, 2
E3	Sharing Stopwatch	0, 1, 2
E4	Sharing Relay	0, 1, 2
E5	Sharing Display Brightness	0, 1, 2
E6	Sharing Screen	0, 1, 2
E7		0, 1, 2
I0	Sharing Sensor 1	0, 1, 2

Menu Item	Description	Value(s)
11	Sharing Sensor 2	0, 1, 2
20	Local Stopwatch Setting	0, 1

Values with * have an accessible submenu, e.g., 1P *.

12.1. UDP Port Setting

Navigation

Menu:

Item:

Available values:

Pt (submenu)

Description

To set the UDP port value, enter the Submenu Pt and set your desired UDP port by following items

The UDP port is set in format `xxyyy` , range: `1` – `65535` . The default port is `65533` .

Submenu

Submenu Pt for setting the UDP port

Value	Description	Range
A [x][x]	UDP Port, thousands setting	• First digit: 0 – 6 • Second digit: 0 – 9
b [y][y][y]	UDP Port, units setting	• All digits: 0 – 9

You cannot select a port currently used by another service. By default, ports `65532` and `65534` are occupied.

12.2. Sharing Display Mode (Default Display, Stopwatch)

Navigation

Menu:

Item:

Available values:

0, 1, 2

Description

Sharing information on whether to display the main screen (time, date, etc.) or the stopwatch.

Available Settings

Value	Description
0	Disabled
1	Master
2	Slave

12.3. Sharing Stopwatch

Navigation

Menu:

Item:

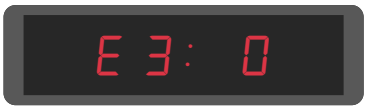

Available values:

0, 1, 2

Description

Sharing the stopwatch along with its mode and settings (counting direction, start value, etc.).

In order to display the correct stopwatch value, the Slave clock **must be synchronized** .

If the Slave clocks need to have different stopwatch settings, set the ShrE menu item 20 to value 1 (see Local Stopwatch Setting chapter).

Available Settings

Value	Description
0	Disabled
1	Master
2	Slave

12.4. Sharing Relay

Navigation

Menu:

Item:

Available values:

0, 1, 2

Description

Sharing the relay status (the Slave clock may not be equipped with REL option, but its virtual status can be shared).

Available Settings

Value	Description
0	Disabled
1	Master
2	Slave

12.5. Sharing Display Brightness

Navigation

Menu:

Item:

Available values:

0, 1, 2

Description

Sharing the set display brightness.

The desired display brightness can be set in the dISP menu item d1 (see Display Brightness chapter).

Available Settings

Value	Description
0	Disabled
1	Master
2	Slave

12.6. Sharing Screen

Navigation

Menu:

Item:

Available values:

0, 1, 2

Description

Direct screen sharing. Menu navigation and similar actions are also shared.

Available Settings

Value	Description
0	Disabled
1	Master
2	Slave

12.7. Sharing Sensor 1

Navigation

Menu:

Item:

Available values:

0, 1, 2

Description

Sharing values measured by sensor 1. In the Slave clocks, a virtual shared sensor 1 can then be set as sensor type in the SEN 1 menu item t 1 (see Sensor Type chapter).

Available Settings

Value	Description
0	Disabled
1	Master
2	Slave

12.8. Sharing Sensor 2

Navigation

Menu:

Item:

Available values:

0, 1, 2

Description

Sharing values measured by sensor 2. In the Slave clocks, a virtual shared sensor 2 can then be set as sensor type in the SEN 2 menu item t 1 (see Sensor Type chapter).

Available Settings

Value	Description
0	Disabled
1	Master
2	Slave

12.9. Local Stopwatch Setting

Navigation

Menu:

Item:

Available values:

0 , 1

Description

If this settings is disabled, the Slave clocks will not share stopwatch settings with Master clock.

Available Settings

Value	Description
0	Disabled
1	Enabled

12.10. Examples of Share Mode Settings

Sharing Stopwatch and Relays over LAN with Automatic Transition to Stopwatch

Connection Description

- Multiple clocks synchronized by NTP protocol (NTP / PoE / WiFi variant) connected to a common network.
- One Master clock with BRB10 connected, the rest Slave clocks with sirens connected to their relays.
- Source of synchronization of all clocks NTP server (e.g. pool.ntp.org)
- Default display of Time, when BRB is presed, transition to Stopwatch display and starting the countdown of 5 minutes, relay on

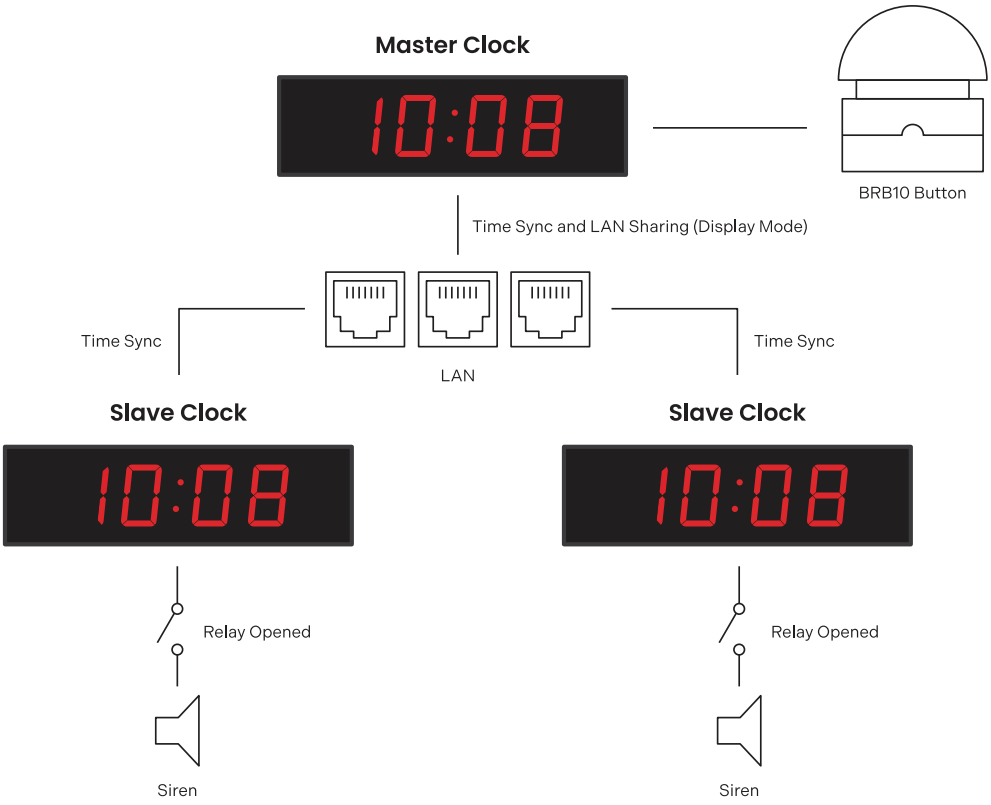
Master Clock
10:08
BRB10 Button
Time Sync and LAN Sharing (Display Mode)
Time Sync
LAN
Time Sync
Slave Clock
10:08
Slave Clock
10:08
Relay Opened
Relay Opened
Siren
Siren

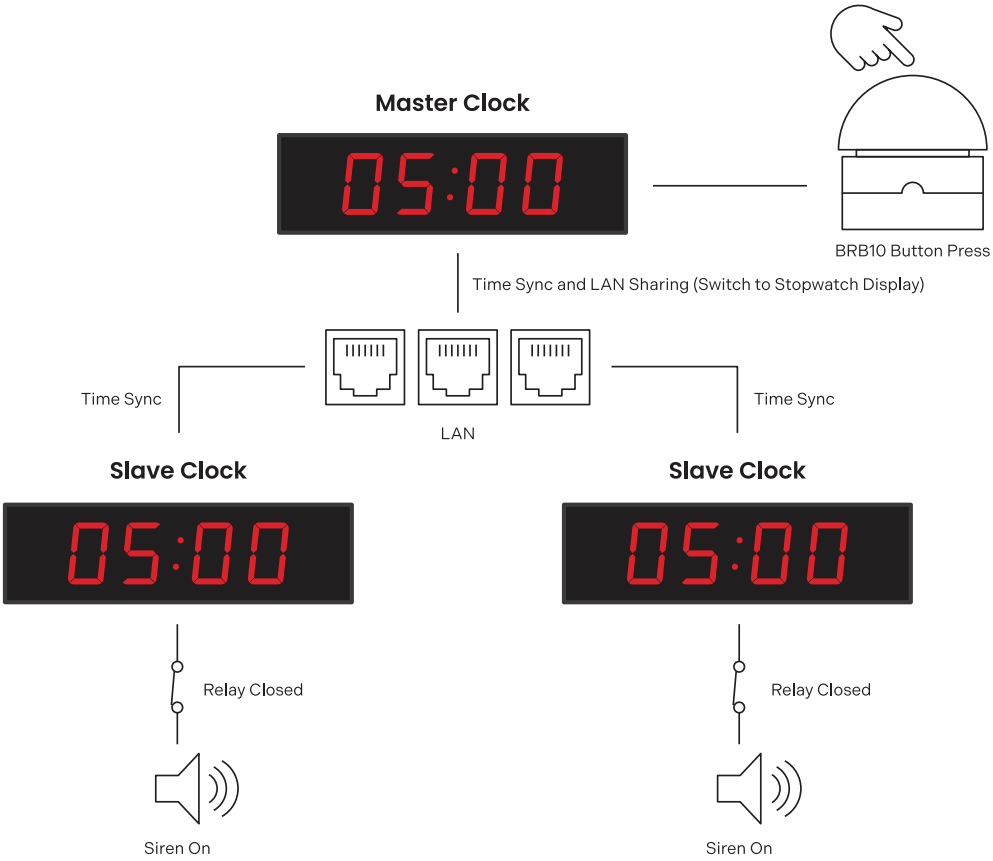
Master Clock
05:00
BRB10 Button Press
Time Sync and LAN Sharing (Switch to Stopwatch Display)
Time Sync
LAN
Time Sync
Slave Clock
05:00
Slave Clock
05:00
Relay Closed
Relay Closed
Siren On
Siren On

Master Clock Settings

Sharing Settings

Setting	Menu	Item	Value
Sharing Display Mode as Master	ShrE	E2	1
Sharing Stopwatch as Master	ShrE	E3	1
Sharing Relay as Master	ShrE	E4	1

Other Settings

Setting	Menu	Item	Value
Stopwatch in Countdown Mode	StoP	h1	2
Stopwatch Countdown Period 5 min	StoP	PrES	00:05
Relay Disconnect on Countdown (this setting is also available for variant without Relay option if Sharing Relay option is enabled in Master mode)	StoP	h4	C
External Keyboard Connection	StoP	h6	1
BRB10 Control Mode	StoP	h2	6

Slave Clock Settings

Sharing Settings

Setting	Menu	Item	Value
Sharing Display Mode as Slave	ShrE	E2	2
Sharing Stopwatch as Slave	ShrE	E3	2
Sharing Relay as Slave	ShrE	E4	2

For Sharing Stopwatch to work properly, all clocks must be synchronized (NTP server in this example), otherwise the slave clock will display --:-- .

13 System Settings

The display shows following:

Enter digital clock's main menu and navigate to SYSt submenu. Enter by pressing the PB2L push-button or the OK button on the remote controller.

System Settings Summary

Menu Item	Description	Value(s)
c0	Diagnostic tools	1•*, 2 *, 3 *, 4 *, 5 *, 6 *, 7 *, 8 *
c1	Factory Reset	0 •, 1
c2	Firmware Update via USB Process Settings	0 •, 1 *
c3	Clock Address for IR Remote Controller (New since version r 7.15)	1 – 99
c4	IR Remote Controller Auto-Lock (New since version r 7.15)	1 – 60 , U
c5	Display Brightness Derating	0 , -1 , -2 , -3 , -4 , -5
c6	Light Sensor Correction	5 , 4 , 3 , 2 , 1 , 0 , -1 , -2 , -3 , -4 , -5
c7	Individual Digit Brightness Setting (New since version r 8.02)	d1 *
c8	Individual Dot Brightness Setting (New since version r 8.02)	do *

Default values are indicated with •, e.g., 1 •.
Values with * have an accessible submenu, e.g., IP *.

The menu items indicated by red line may not be available to all users. Its availability can vary depending on device configuration.

The menu items may be available for all users in future versions.

13.1. Diagnostic tools

Navigation

Menu:

Item:

Available values:

0, 1, 2, 3, 4, 5, 6, 7, 8

Description

Diagnotic tools are set of specialized features and tools that allow you to monitor clock's functions.

Available tools

Value(s)	Description
1 * (default value)	Display test
2 *	Display of active alarms
3 *	Display of internal temperature
4 *	Display of test results
5 *	Display of calibration deviation
6 *	Passive DCF diagnostic menu
7 *	Display of line quality diagnostics
8 *	GPS diagnostic menu

All values have accessible submenu.

13.1.1. Display Test Submenu

After entering this item, all segments of the display will light up.
The display shows following:

13.1.2. Active Alarms Submenu

Value(s)	Description
AL:--	If any alarm is not active

Value(s)	Description	
AL: xx	xx represents active alarm bit:	
	0	Synchronization lost in last one hour
	6	Device restart
	7	NMS communication error
	8	Time zone error (season server)
	9	NMS authentication error
	33 *	Empty calibration value (not calibrated)
	34 *	Synchronization timeout
	35 *	Not tested (test not passed)
	36 *	SSL certificates not present
	39 *	Hardware error – some module or peripheral is not present
	To browse between active bits, use >> or PB2 . Alarm bits with * are indicated by state LED.	

13.1.3. Internal Temperature Submenu

Value(s)	Description
ddºC	dd represents internal temperature in °C Example: 25ºC

13.1.4. Test Results Submenu

Value(s)	Description
PASS	Tested in production with pass result
FAIL	Tested in production with failed result
Not	Not tested in production

13.1.5. Calibration Deviation Submenu

Value(s)	Description
-- --	Calibration deviation greater than 1000 ppm
0 ---	Calibration deviation greater than 100 ppm
-- .--	Calibration deviation less than 100 ppm

Negative deviation is indicated by a lit dot at the first digit.

Currently running calibration is indicated by a flashing decimal point.

13.1.6. Passive DCF diagnostic menu

`xx:yz` – display during the minute, i.e. when receiving bits

Value(s)	Description
`xx`	Number of bits received in the current minute, ideally the counter corresponds to the current seconds value (range 0–58)
`y`	Value of the last received bit (value 0 or 1)
`z`	The number of consecutive telegrams received with time that were decoded without error Range 0–9, value greater than 9 is then displayed with a decimal point, i.e. 9.

At one full minute (or if there is a pause between incoming bits of approx. 2 seconds), i.e. it is assumed that the whole telegram is received, a screen is displayed which shows the result of the telegram processing:

Value(s)	Description	
`--:-z`	Indicates successful processing of the DCF telegram, when `z` indicates the current value of the counter of consecutive received telegrams	
Er:dd	Value `dd` corresponds to the possible states listed bellow:	
	`0x01`	incorrect number of received bits
	`0x02`	missing start bit for the beginning of the telegram
	`0x04`	missing start bit for time reception
	`0x08`	parity error when decoding the minutes value
	`0x10`	parity error when decoding the hours value
	`0x20`	parity error in date decoding
	`0x40`	invalid decoded time range
	`0x80`	invalid decoded date range

13.1.7. Line quality diagnostics submenu

The individual parameters are displayed as submenu items. You can browse between individual parameters by pressing the >> or PB2 .

Value(s)	Description	
Sc	detected synchronization signal source type submenu	
	Sc:-	the synchronization source is not yet identified when **auto** is selected

Value(s)	Description		
	Sc: xx	value xx indicates the type of the identified link, the displayed value corresponds to the description of the SYNC menu item o2 (Type of synchronization)	
u	detected synchronization signal quality submenu		
	u–	the synchronisation signal is not yet correctly detected	
	u xxx	value xxx corresponds to the percentage of the synchronization signal processing quality	
Er	number of synchronization signal processing errors submenu		
	Er: xx	value xx in range 0–99	
	Er:99.	counter value is greater than 99	
t	countdown of the time limit in seconds for restarting the synchronization signal detection process submenu		
	t xxx	value xxx in range 0–999	
	t999.	counter value is greater than 999	
	With successful signal processing, the countdown never reaches zero		
St	synchronization signal processing status submenu		
	St: xx	value xx corresponds to the possible states:	
		0	unknown
		1	line detected
		2	line frame detected
		3	line frame checked
		4	line time detected
		5	time zone detected

13.1.8. GPS Diagnostic Submenu

Value(s)	Description	
St	GPS status	
	EE	GPS module error. Not present or not communicating.
	-	GPS not detected
	2d	2D Fix – GPS detected in 2D mode
	3d	3D Fix – GPS detected in 3D mode
Su	Number of satellites used to calculate position	

Value(s)	Description	
SA	Number of available satellites	
PP	Position Determination Accuracy (PDOP)	
	HI	Highest PDOP < 1.0
	1 – 2	High
	2 – 5	Good
	5 – 10	Sufficient
	10 – 20	Low
	LO	Very Low PDOP > 20

13.2. Factory Reset

Navigation

Menu:

Item:

Available values:

0 , 1

Available Settings

Value(s)	Description
0 (default value)	No function
1 *	Invoke factory reset, proceeds to enter Submenu for Factory Reset

13.2.1. Submenu for Factory Reset

Value(s)	Description
FAC	FAC inscription flashes, confirming the PB2L push-button or the OK button on the remote control will restart the clock to factory settings

The detailed procedure and other types of factory reset are described in the Factory Reset to Default Values chapter.

13.3. Firmware Update via USB Process Settings

Added in version r7.07.

Available only for LGC or GPS variant.

Navigation

Menu:

Item:

Available values:

0 , 1

Description

Firmware update is a process of upgrading software that is embedded in a hardware device. These updated can bring various benefits, such as bug fixes or new features. This settings allows to update the firmware of the clock via USB drive with update file on it.

Detailed firmware update via USB procedure can be found in chapter Firmware update via USB .

Available Settings

Value(s)	Description
0 (default value)	No function
1 *	Invoke firmware update process Enter the submenu for firmware update

Submenu

Submenu for Firmware Update

Value(s)	Description	
FU: xx	FU: xx inscription flashes, where xx represents USB signalization state	
	FU: 1 – 99	the process of copying file
	FU: 0	USB drive initialization is OK
	FU:- 1	USB drive not loaded
	FU:- 2	update file not found
	FU:- 3	invalid file for the device
	FU:- 4	unknown error

For state 0 , confirming OK or PB2L starts the update process; if the file on the drive is OK, the copy process starts and its progress is displayed as a positive number in range 1 – 99 .

13.4. Clock Address for IR Remote Controller

If your firmware version is r7.14 or lower, you may find this setting in the d I S P menu item d 8 .

Navigation

Menu:

Item:

Available values:

1 – 9 9

Description

The clock address for an IR remote controller is a specific identifier assigned to digital clock. This code serves as unique “address” that allows the remote controller to communicate and control particular clock. The clock control address is essential for ensuring that the remote controller signals and commands are received by the target device.

Available Settings

Value(s)	Description
1 – 9 9	Set clock address

More information can be found in Clock Address Display chapter.

13.5. IR Remote Controller Auto-Lock

If your firmware version is r7.14 or lower, you may find this setting in the d I S P menu item d 9 .

Navigation

Menu:

Item:

Available values:

1 – 6 0 , U

Description

This feature ensures the IR reception lock of digital clock after a specific period of inactivity (since the last press of any button on the IR remote controller), preventing unintentional button presses on the IR remote controller.

Available Settings

Value(s)	Description
1 – 6 0 (minutes)	Time in minutes for auto-lock since last press of a button on IR remote controller

Value(s)	Description
U	Auto-Lock is OFF

More information can be found in Automatic Lock .

13.6. Remote Control Lock

If your firmware version is r7.14 or lower, you may find these setting in the d I S P menu (see Remote Control Lock chapter).

The clock can be locked against unauthorized or unwanted operation using the remote controller.

13.6.1. Manual Lock

To lock all clock within the range of IR remote controller beam, long-press the F2 button. Clock lock is indicated by displaying L O C on the clock display.

13.6.2. Automatic Lock

To set the IR remote controller auto-lock after time period, navigate to the S Y S t menu item c 4 (see IR Remote Controller Auto-Lock chapter).

Automatic lock of the clock after **x** minutes is not indicated on the display.

13.6.3. Clock Address Display

To set clock address for IR remote controller, navigate to the S Y S t menu item c 3 (see Clock Address for IR Remote Controller chapter).

The address display is enabled by press of the F3 button and is indicated on the display as A xx .

The address is displayed only when the clock is locked.

xx represents the set address with initial zero.

A 0 I → Clock Address 1

13.6.4. Unlocking the Clock

To unlock all clocks within the range of the IR remote controller beam, long-press the F1 button. Clock unlock is indicated by displaying U n L on the clock display.

To unlock only specific clock with a specific address, press the F1 button followed by the clock address in two-digit format with leading zero.

Thus, for a clock with address 5, the sequence will be as follows:

Press the F1 button → Set the first digit number to 0 → Set the second digit number to 5

Successful unlocking is indicated by displaying UNL on the clock display.

13.7. Display Brightness Derating

Added in version r8.0.

Navigation

Menu:

Item:

Available values:

0, -1, -2, -3, -4, -5

Description

Display brightness derating is a feature that adjusts the brightness of display based on specific conditions or user preferences.

Available Settings

Value	Description
0	Display Brightness Derating 0%
-1	Display Brightness Derating -10%
-2	Display Brightness Derating -20%
-3	Display Brightness Derating -30%
-4	Display Brightness Derating -40%
-5	Display Brightness Derating -50%

13.8. Light Sensor Correction

Added in version r8.0.

Navigation

Menu:

Item:

Available values:

5, 4, 3, 2, 1, 0, -1, -2, -3, -4, -5

Description

Light sensor correction setting is a feature designed to optimize the accuracy and performance of light sensor used to automatically adjust a display brightness.

Available Settings

Value	Description
5	Light Sensor Correction 50%
4	Light Sensor Correction 40%
3	Light Sensor Correction 30%
2	Light Sensor Correction 20%
1	Light Sensor Correctionn 10%
0	Light Sensor Correction 0%
-1	Light Sensor Correction -10%
-2	Light Sensor Correction -20%
-3	Light Sensor Correction -30%
-4	Light Sensor Correction -40%
-5	Light Sensor Correction -50%

13.9. Individual Digit Brightness Setting

Added in version r8.02.

This menu item may not be available to all users. Its availability can vary depending on device configuration.

This menu item may be available for all users in future versions.

Navigation

Menu:	Item:	Available values:
		d 1 (submenu)

Description

This setting allows you to adjust the brightness of individual digits. Each digit is adjusted separately, with values ranging from values 0 to E (values 0 – 9 , then values A – E). This is useful in cases where certain digits are brighter than other, and you need to balance their brightness.

Proceed to enter the submenu d 1 by pressing PB2L or OK on IR remote controller.

Submenu

Submenu d 1

Value	Description	Range
00:00. 00:00.00. 00:00:00.	Setting of display brightness of individual digits (set value is blinking)	0 – E

13.9.1. Settings Procedure

1. Enter the submenu d 1 by pressing PB2L or OK on IR remote controller. The first digit is blinking.
2. Set your desired brightness ranging from 0 (no change to brightness) to E (maximal brightness reduction):
   - To increase the set value (increase brightness reduction), press the PB2 button or + button on IR remote controller.
   - To descrease the set value, press the PB1 button or – button on IR remote controller.
3. If you are satisfied with the set brightness, press the PB2L or OK on IR remote controller to move to next digit. The next digit is blinking. Repeat the procedure.
4. If you are satisfied with the brightness of all digits, press the the PB2L or OK on IR remote controller until the end. It will automaticaly save the set values and return to SYSt menu item c 7:d 1 .

13.10. Individual Dot Brightness Setting

Added in version r8.02.

This menu item may not be available to all users. Its availability can vary depending on device configuration.

This menu item may be available for all users in future versions.

Navigation

Menu:	Item:	Available values:
		d o (submenu)

Description

This setting allows you to adjust the brightness of individual dots. Each dot is adjusted separately, with values ranging from values 0 to E (values 0 – 9 , then values A – E). This is useful in cases where certain dots are brighter than other, and you need to balance their brightness.

Proceed to enter the submenu d o by pressing PB2L or OK on IR remote controller.

Submenu

Submenu d o

Value	Description	Range
00:00. 00:00. 00. 00:00:00.	Setting of display brightness of individual dots (digit is blinking – see table below for more info)	0 – E

13.10.1. Settings Procedure

1. Enter the submenu d o by pressing PB2L or OK on IR remote controller. The first digit is blinking (this indicated setting of brightness of the first dot).
   For more information of what digits represents what dot, please see the figure or table below.
2. Set your desired brightness of dot ranging from 0 (no change to brightness) to E (maximal brightness reduction):
   - To increase the set value (increase brightness reduction), press the PB2 button or + button on IR remote controller.
   - To descrease the set value, press the PB1 button or – button on IR remote controller.
3. If you are satisfied with the set brightness, press the PB2L or OK on IR remote controller to move to next dot setting. The next digit representing next dot is blinking. Repeat the procedure.
4. If you are satisfied with the brightness of all dots, press the the PB2L or OK on IR remote controller until the end. It will automaticaly save the set values and return to SYSt menu item c 8:d o .

Digits > Dots

Flashing Digit	Set Dot
First digit	Dot on top left corner (AM / PM indication)
Second digit	Dot on bottom right corner next to second digit
Third digit	First colon
Fourth digit	Dot on bottom right corner next to fourth digit
Fifth digit [1]	Second colon (for display configuration 4 + 2 digits no colon is displayed)

Flashing Digit	Set Dot
Sixth digit	Dot on bottom right corner next to sixth digit

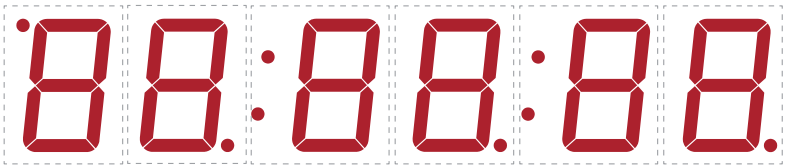

1 Only for display configuration of 4 + 2 or 6 digits.

14 Local time calculation

14.1. According to Synchronization Source

This setting is suitable for digital clock synchronized by a DCF receiver or controlled by a master clock as SLAVE clock in a time distrubution system. The internal timezone table is not used.

Item	Set Value(s)	Description
o 1	A	Timezone is takes over according to the source of synchronization
o 2	2 – 9 , 1 1 , A	Synchronization signal type
o 4	0	MOBALine timezone is not used
o 5	0	Timezone server is not used
d 2	A	Display time and date according to source of synchronization including daylight saving time

14.2. According to MOBALine Timezones

This setting is suitable for digital clock controlled by a MASTER clock as a MOBALine SLAVE clock in a time distribution system with possibility to display different MOBALine timezones.

Item	Set Value(s)	Description
o 1	A	Timezone is taken over according to the source of synchronization, the UTC time calculation is based on the MOBALine information
o 2	4	MOBALine
o 4	1 – 2 0	Selection of MOBALine timezone
d 2	A	Display time and date according to chosen MOBALine timezone including daylight saving time

14.3. According to MOBA-NMS Preconfigured Timezones

This setting is suitable for NTP, PoE, WiFi and WiFi5 digital clock where several user defined timezones entries should be used. The timezone entries are preconfigured by means of the MOBA-NMS software.

Item	Set Value(s)	Description
o 1	A	NTP protocol uses UTC timezone
o 2	A	Automatic

Item	Set Value(s)	Description
o 5	0	No timezone server is used
d 2	U 1 – U 7	Display time and date according to chosen preconfigured timezone entry including daylight saving time

14.4. According to Server MOBATIME

This setting is suitable for NTP, PoE, WiFi and WiFi5 digital clock controlled by MOBATIME NTP servers which supports the timezone server functionality.

Item	Set Value(s)	Description
o 1	A	NTP protocol uses UTC time
o 2	A	Automatic
o 5	1 – 15	Selection of the time zone server time zone
d 2	A	Display time and date according to chosen time zone server time zone including daylight saving time

14.5. According to Internal Timezone Table

This setting is suitable for autonomous digital clocks or in cases where the displayed time is needed in another timezone than provided by the synchronization source. Displayed time and date calculation is based on the internal timezone table or on the user-specific timezone parameters – see Timezones Table chapter.

Item	Set Value(s)	Description
o 1	0 – 64 , A	According to the timezone in which the source of synchronization works (e.g. value 2 for DCF in west Europe, value A for NTP synchronization) Value A only for synchronization source working with UTC time
o 2	1 – 11 , A	Autonomous operation or any type of the synchronization signal
o 4	0	MOBALine timezone is not used
o 5	0	Timezone server is not used
d 2	0 – 64 , U	Display time and date by calculation from the UTC time according to chosen timezone including daylight saving time

15 Timezones Table

Time zones are a system of dividing the Earth's surface into regions, each with its own unique time offset from UTC (Coordinated Universal Time) or GMT (Greenwich Mean Time) and which may have different rules for change seasonal time. This division allows for consistent and synchronized timekeeping across the globe.

No.	City / State	UTC Offset	DST	Standard → DST	DST → Standard
00	UTC GMT, Monrovia, Casablanca	0	No		
01	London, Dublin, Edinburgh, Lisbon	0	Yes	last Sunday March (01:00)	last Sunday October (02:00)
02	Brussels, Amsterdam, Berlin, Bern, Copenhagen, Madrid, Oslo, Paris, Rome, Stockholm, Vienna, Belgrade, Bratislava, Prague, Budapest, Ljubljana, Sarajevo, Sofia, Vilnius, Warsaw, Zagreb	+1	Yes	last Sunday March (02:00)	last Sunday October (03:00)
03	Athens, Helsinky, Riga, Tallinn	+2	Yes	last Sunday March (03:00)	last Sunday October (04:00)
04	Bucharest	+2	Yes	last Sunday March (03:00)	last Sunday October (04:00)
05	Pretoria, Harare, Kaliningrad	+2	No		
06	Amman	+2	Yes	last Thurdays March (23:59)	last Friday October (01:00)
07	UTC (GMT)	0	No		
08	Istanbul, Kuwait City, Minsk, Moscow, Saint Petersburg, Volgograd	+3	No		
09	Praia, Cape Verde	-1	No		
10	UTC (GMT)	0	No		
11	Abu Dhabi, Muscat, Tbilisi, Samara	+4	No		
12	Kabul	+4.5	No		
13	Adamstown (Pitcairn Is.)	-8	No		
14	Tashkent, Islamabad, Karachi, Yekaterinburg	+5	No		
15	Mumbai, Kolkata, Chennai, New Delhi, Colombo	+5.5	No		
16	Astana, Thimphu, Dhaka, Novosibirsk	+6	No		
17	Bangkok, Hanoi, Jakarta, Krasnoyarsk	+7	No		
18	Beijing, Hong Kong, Singapore, Taiper, Irkutsk	+8	No		
19	Tokyo, Seoul, Yakutsk	+9	No		
20	Gambier Island	-9	No		

No.	City / State	UTC Offset	DST	Standard → DST	DST → Standard
21	South Australia: Adelaide	+9.5	No		
22	Northern Territory: Darwin	+9.5	No		
23	Brisbane, Guam, Port Moresby, Vladivostok	+10	No		
24	Sydney, Canberra, Melbourne, Tasmania: Hobart	+10	Yes	1 st Sunday October (02:00)	1 st Sunday April (03:00)
25	UTC (GMT)	0	No		
26	UTC (GMT)	0	No		
27	Honiara (Solomon Is.), Magadan, Noumea (New Caledonia)	+11	No		
28	Auckland, Wellington	+12	Yes	last Sunday September (02:00)	1 st Sunday April (03:00)
29	Majuro (Marshall Is.), Anadyr	+12	No		
30	Azores	-1	Yes	last Sunday March (00:00)	last Sunday October (01:00)
31	Middle Atlantic	-2	No		
32	Brasilia	-3	Yes	3 rd Sunday October (00:00)	3 rd Sunday February (00:00)
33	Buenos Aires	-3	No		
34	Newfoundland	-3.5	Yes	2 nd Sunday March (02:00)	1 st Sunday November (02:00)
35	Atlantic Time (Canada)	-4	Yes	2 nd Sunday March (02:00)	1 st Sunday November (02:00)
36	La Paz	-4	No		
37	Bogota, Lima, Quito	-5	No		
38	New York, Eastern Time (US & Canada)	-5	Yes	2 nd Sunday March (02:00)	1 st Sunday November (02:00)
39	Chicago, Central Time (US & Canada)	-6	Yes	2 nd Sunday March (02:00)	1 st Sunday November (02:00)
40	Tegucigalpa, Honduras	-6	No		
41	Phoenix, Arizona	-7	No		
42	Denver, Mountain Time	-7	Yes	2 nd Sunday March (02:00)	1 st Sunday November (02:00)
43	Los Angeles, Pacific Time	-8	Yes	2 nd Sunday March (02:00)	1 st Sunday November (02:00)
44	Anchorage, Alaska (US)	-9	Yes	2 nd Sunday March (02:00)	1 st Sunday November (02:00)

No.	City / State	UTC Offset	DST	Standard → DST	DST → Standard
45	Honolulu, Hawaii (US)	-10	No		
46	Midway Is. (US)	-11	No		
47	Mexico City, Mexico	-6	Yes	1 st Sunday April (02:00)	last Sunday October (02:00)
48	Adak (Aletuian Is.)	-10	Yes	2 nd Sunday March (02:00)	1 st Sunday November (02:00)
49	UTC (GMT)	0	No		
50	UTC (GMT)	0	No		
51	UTC (GMT)	0	No		
52	UTC (GMT)	0	No		
53	UTC (GMT)	0	No		
54	Ittoqqortoormiit, Greenland	-1	Yes	last Sunday March (00:00)	last Sunday October (01:00)
55	Nuuk, Qaanaaq, Greenland	-3	Yes	last Saturday March (22:00)	last Saturday October (23:00)
56	Myanmar	+6.5	No		
57	Western Australia: Perth	+8	No		
58	Caracas	-4.5	No		
59	CET standard time	+1	No		
60	not used				
61	not used				
62	Baku	+4	Yes	last Sunday March (04:00)	last Sunday October (05:00)
63	UTC (GMT)	0	No		
64	UTC (GMT)	0	No		

Legend

UTC : Coordinated Universal Time
UTC Offset : Time difference from UTC time
DST : Daylight Saving Time
Standard → DST : Time change from Standard (Winter) Time to Summer Time
DST → Standard : Time change from Summer Time to Standard (Winter Time)

2nd last Sunday March (02:00)

↓

switch over on the penultimate Sunday in March at 02:00 hours local time

16 Factory Reset to Default Values

16.1. Factory Reset Using Menu

In an event that the clock gets to state that it does not work properly due to incorrect configuration or it is not possible to connect to the clock via Ethernet, the situation can be solved by invoking the factory settings from the clock menu Factory Reset (the SYSt menu item c 1).

16.1.1. Procedure

1. Enter the digital clock menu using the PB2L push-button or the MENU button on the remote control.
2. Use PB2 push-button or >> button on the remote control to navigate to the SYSt menu.
   To enter, press the PB2L push-button or the OK button on the remote control.
3. Use PB2 push-button or >> button on the remote control to navigate to the menu item c 1 .
   To enter, press the PB2L push-button or the OK button on the remote control. Set value is flashing.
4. Use the PB2 push-button or the + button on the remote control increase the value to 1 .
   FAC inscription flashes.
5. Confirming the PB2L push-button or the OK button on the remote control will restart the clock to factory settings.

16.2. Factory Reset via Web Interface

If your clock is synchronized using the NTP protocol and has access to the web interface, it is possible to invoke the default values through the web interface (Command Tab).

16.2.1. Procedure

1. Access the web interface.

   For instruction on accessing the web interface, please refer to the How to Access the Web Interface? chapter.

2. Navigate to Command tab .
3. Set the field **Factory reset** to **Perform reset** and click on **Apply** .
4. The clock restarts to factory settings.

16.3. Factory Reset Using Push-Buttons

Added in version r7.16.

In extreme cases where a misconfiguration causes the clock to enter a reset loop, the clock menu becomes inaccessible, and it is impossible to invoke the default values through the menu.

The issue can be resolved by using a specific combination of push-button presses to perform a factory reset.

16.3.1. Procedure

1. Connect the clock to power supply.
2. Press and hold PB1 and PB2 push-buttons at the same time.
3. Restart the clock by briefly pressing the reset button while holding PB1 and PB2 push-buttons at the same time.

The reset button is located inside of the clock on clock's control module located on PCB.

First, you need to dismount the front plexiglass (see Dismounting the Front Plexiglass chapter) and you also need to dismount the clock PCB.

The button is small yellow button labeled `RESET` .

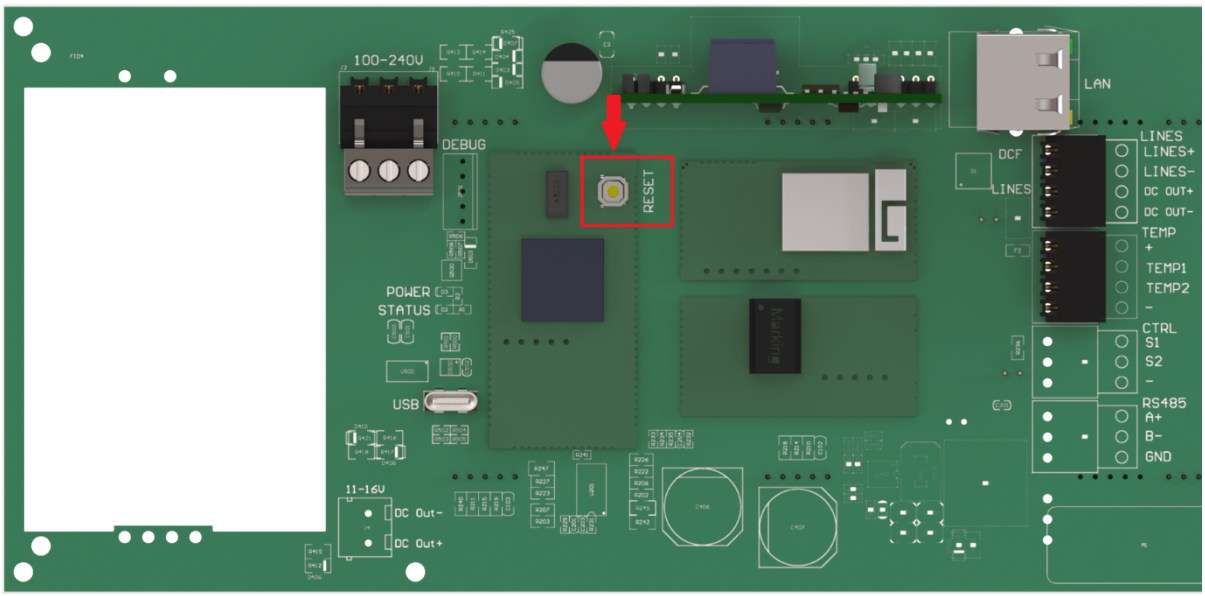

4. Hold both PB1 and PB2 push-buttons until `FAC` appears on the clock display (in approx. 5 seconds).
5. Release PB1 and PB2 push-buttons. The clock restarts to factory settings.

17 Firmware update

This section provides instruction and information on how to update the clock's firmware, which is the software that runs on the clock's internal processor. Firmware updates can bring new features, improvements and bug fixes.

The current firmware version as of 08.10.26: `r8.25`

When updating from version `r7.x` (version lower than `r8.0`) to version e.g. `r8.2` , you **must** first update to version `r8.0` (to download, go to the URL <https://docs.mobatime.cloud/ECO-DC/firmware/bin/dc4-8.00.zip>). Only then can you update freely to any version. **This intermediate step is crucial!**

17.1. Firmware update via MOBA-NMS

For instruction about firmware update via MOBA-NMS, please visit www.mobatime.com/product/moba-nms/ .

17.2. Firmware update via SNMP

1. Install TFTP server (e.g. `tftpd32`).
2. Allow access in Windows security window after opening TFTP server file.

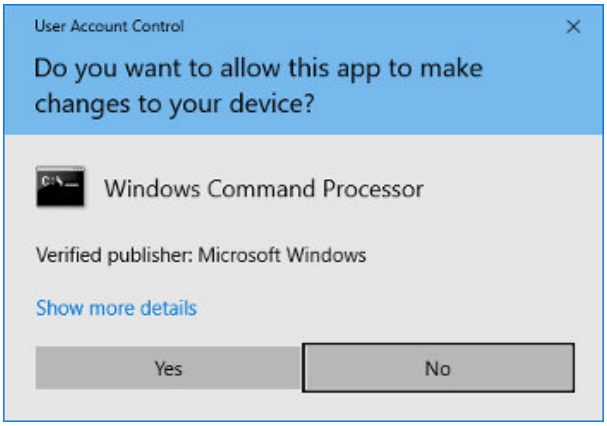

3. Place the firmware file named `device.upd` to folder from which your TFTP server serve files.
4. Open your SNMP manager software and load MIB file.

   To download the MIB file, visit the following URL: https://docs.mobatime.cloud/ECO-DC/snmp

5. Find variable `mbnscCommandFirmwUpd (OID = .1.3.6.1.4.1.13842.6.2.7.4)` and set it to `device.upd` .
6. In dependence of your TFTP server, information about update progress is displayed.
7. Wait about 1 minute after firmware download.
8. Check whether the firmware version is correct.

   If the firmware version is not correct, it is necessary to repeat the procedure.

17.3. Firmware update via web server

1. Install TFTP server (e.g. `tftpd32`).

2. Allow access in Windows security window after opening TFTP server file.

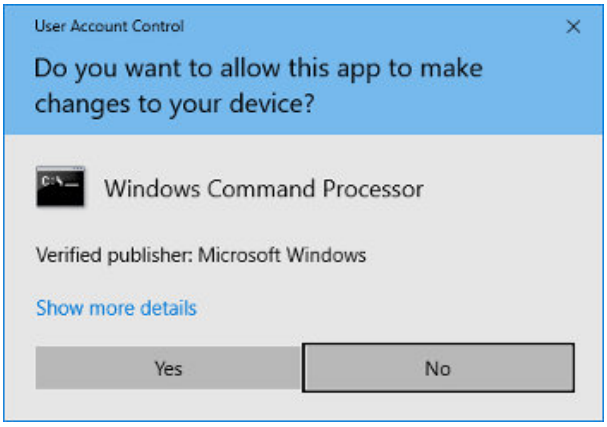

3. Place the firmware file named `device.upd` to folder from which your TFTP server serve files.
4. Open the web interface of the digital clock you want to update.

For instruction on accessing the web interface, please refer to the How to Access the Web Interface? chapter.

5. In web interface, Navigate to Command tab.
6. Set the field **"Firmware update"** to **"Perform update over TFTP"** and click on **"Apply"** . Update will be invoked.
7. In dependence of your TFTP server, information about update progress is displayed.
8. Wait about 1 minute after firmware download.
9. Check whether the firmware version is correct.

If the firmware version is not correct, it is necessary to repeat the procedure.

17.4. Firmware update via USB

Added in version r7.07.

Firmware update via USB is available only for LGC or GPS variant of digital clock.

1. Upload the firmware file named `device.upd` to the USB drive.
2. Connect the USB drive to the clock using the USB-A connector on the clock PCB.
3. Open the clock menu, go to the SYSt submenu and proceed to enter.
4. Navigate to menu item c2 (see Firmware Update via USB Process Settings chapter).
5. Setting the item c2 to value 1 will activate the firmware update process.

First step of the Firmware update process is to load the USB device.

The display will show a flashing FU: `xx` , where `xx` represents the result of the process:

0 : USB drive connected

-1 : USB drive not found

If the USB drive is not found, format the USB drive to NTFS format.

6. If FU: 0 is displayed, the file transfer can be started by pressing OK button on IR remote controller or by pressing PB2L .
7. If the file on the USB drive is OK, the message stops flashing and FU: `xx` is displayed with only flashing colons, where `xx` already repserents the percentage progress of the file transfer.
   - If the file is invalid for the device, FU:-3 will flash or if the file is not found, FU:-2 will flash.
8. When the file transfer is complete, the dONE message is displayed and the clock resets after 2 seconds to complete the update process.

Until the file transfer starts, the menu can be exited by pressing the PB1L push-button or the ESC button on the IR remote control.

If the file transfer process fails and the copy process does not complete, the clock must be manually reset, **as the clock control by the buttons or IR remote controller is ignored during the file transfer** – see Factory Reset Using Push-Buttons chapter.

18 Clock specifications

These chapters provide detailed technical data about the clock's specifications and capabalities. These sections help users understand the clock's features, dimensions, power requirements and other important details.

18.1. Basic Data

Display	**57.4**	**57.6**	**57x.6**	**75.4**	**75.6**	**75x.6**	**100.4**	**100.6**	**100x.6**
Digit Height [mm]	57	57 / 38	57	75	75 / 57	75	100	100 / 57	100
Number of Digits	4	4 + 2	6	4	4 + 2	6	4	4 + 2	6
Viewing Distance [m]	25			32			40		

Display Format	**57.4**	**57.6**	**57x.6**	**75.4**	**75.6**	**75x.6**	**100.4**	**100.6**	**100x.6**
HH : MM DD. MM.	✓	×	×	✓	×	×	✓	×	×
HH : MM SS DD. MM. YY	×	✓	×	×	✓	×	×	✓	×
HH : MM : SS DD. MM. YY	×	×	✓	×	×	✓	×	×	✓

Power	**57.4**	**57.6**	**57x.6**	**75.4**	**75.6**	**75x.6**	**100.4**	**100.6**	**100x.6**
Mains Powered	100-240 VAC / 50–60 Hz								
PoE	IEEE 802.3af–Class 3								
VDC Option	18–55 V (see VDC Option Voltage Table chapter)								
VDISP Option	Supply voltage depends on display color (see VDISP Option Voltage Table chapter)								

Power Consumption	**57.4**	**57.6**	**57x.6**	**75.4**	**75.6**	**75x.6**	**100.4**	**100.6**	**100x.6**
Mains Powered	7 (S) 11 (D)	8 (S) 16 (D)	8 (S) 16 (D)	7 (S) 11 (D)	8 (S) 16 (D)	8 (S) 16 (D)	7 (S) 11 (D)	8 (S) 16 (D)	10 (S) 18 (D)
PoE	7 (S) 11 (D)	8 (S) 15 (D)	8 (S) 15 (D)	7 (S) 11 (D)	8 (S) 15 (D)	8 (S) 15 (D)	7 (S) 11 (D)	8 (S) 15 (D)	10 [1] (S) – [1] (D)

Power consumption is in VA.

S: Single Sided, D: Double Sided

Quartz Base and Running Reserve	
Running Reserve	96 hours by means of supercapacitor

Quartz Base and Running Reserve	
Accuracy	±0.1 s/day without synchronization (after 24 hours of synchronization at constant temperature)

Accuracy of Temperature Management (for TP3/30m Sensors)	
Range -25 to +85 °C	±0.5 °C
Range -50 to +125 °C	±2.0 °C

Operating Environment	
Temperature	-5 to +55 °C
Humidity	0 to 95 % (without condensation)
Protection Degree	IP 30 (IP 32 on request)

Weight [kg]	**57.4**	**57.6**	**57x.6**	**75.4**	**75.6**	**75x.6**	**100.4**	**100.6**	**100x.6**
Single Sided	0.75	1.15	1.25	1.25	1.8	1.8	1.8	1.9	2
Double Sided	2	2.8	3	3	4.1	4.1	4.1	4.3	4.5

Dimensions [mm] **W × H × D**	**57.4**	**57.6**	**57x.6**	**75.4**	**75.6**	**75x.6**	**100.4**	**100.6**	**100x.6**
Single Sided	341 × 122 × 44				580 × 180 × 53				
Double Sided	341 × 122 × 99				580 × 180 × 120				

1 PoE not available for ECO-DC.100x.6 double sided.

18.2. Diagram & Dimensions

18.2.1. Wall Mounting Dimensions

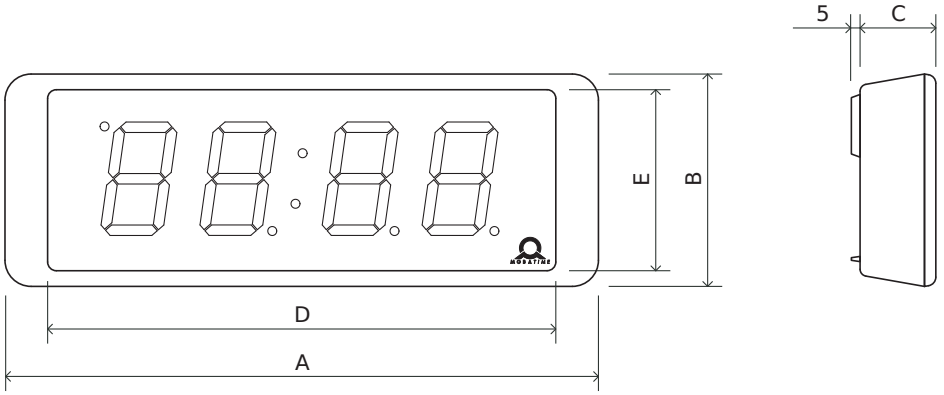

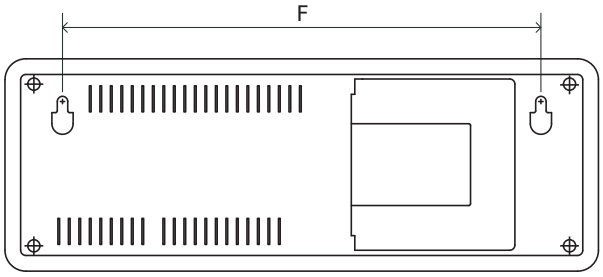

18.2.2. Ceiling Suspension Dimensions

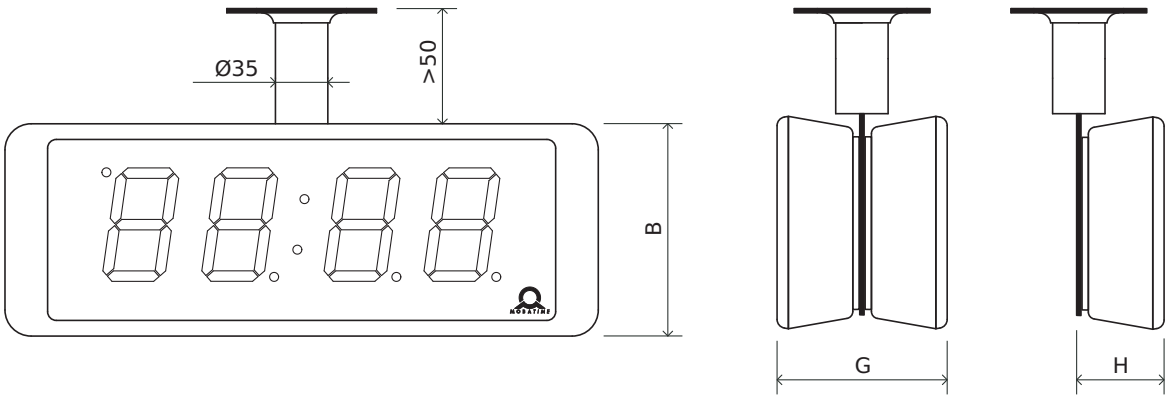

18.2.3. Wall Bracket Dimensions

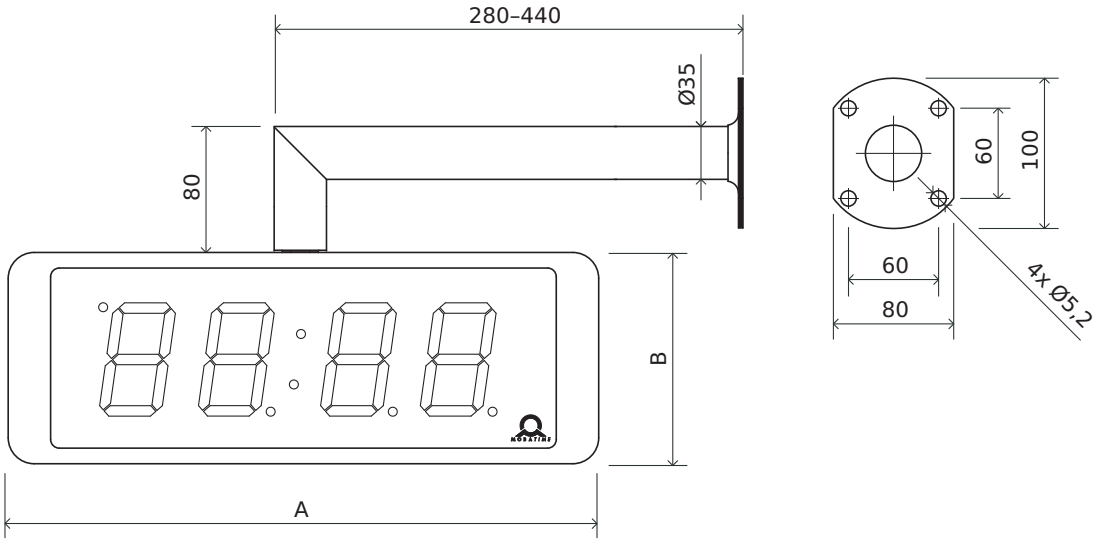

18.2.4. Dimensions Table

Dimensions are in mm.

Index	57.4	57.6	57x.6	75.4	75.6	75x.6	100.4	100.6	100x.6
A	341	341	341	341	580	580	580	580	580
B	122	122	122	122	180	180	180	180	180
C	44	44	44	44	53	53	53	53	53
D	292	292	292	292	520	520	520	520	520
E	104	104	104	104	150	150	150	150	150
F	275	275	275	275	520	520	520	520	520
G	99	99	99	99	120	120	120	120	120
H	52	52	52	52	60	60	60	60	60

18.3. VDC Option Voltage Table

Abbrevations used:

R – Red; **PG** – Pure green; **B** – Blue; **W** – White; **A** – Yellow; **G** – Green

18.3.1. 7-Segment Display

Size	R	PG	B	W	A	G
57.4			18–55			

Size	R	PG	B	W	A	G
57.6			18–55			
57x.6			18–55			
75.4			18–55			
75.6			18–55			
75x.6			18–55			
100.4			18–55			
100.6			18–55			
100x.6			18–55			

Voltage is in V.

18.3.2. SMD LED Display

Available only for digital clock with option **SL** .

Size	R	PG	B	W	A	G
57.4			18–55			–
57.6			18–55			–
57x.6			18–55			–
75.4			18–55			–
75.6			18–55			–
75x.6			18–55			–
100.4			18–55			–
100.6			18–55			–
100x.6			18–55			–

Voltage is in V.

18.4. VDISP Option Voltage Table

Abbrevations used:

R – Red; **PG** – Pure green; **B** – Blue; **W** – White; **A** – Yellow; **G** – Green

18.4.1. 7-Segment Display

Size	R	PG	B	W	A	G
57.4	12		14		12	

Size	R	PG	B	W	A	G
57.6	12		14		12	
57x.6	12		14		12	
75.4	12		14		12	
75.6	12		14		12	
75x.6	12		14		12	
100.4	12		14		12	
100.6	12		14		12	
100x.6	12		14		12	

Voltage is in V.

18.4.2. SMD LED Display

Available only for digital clock with option **SL** .

Size	R	PG	B	W	A	G
57.4	15		18		15	–
57.6	15		18		15	–
57x.6	15		18		15	–
75.4	15		18		15	–
75.6	15		18		15	–
75x.6	15		18		15	–
100.4	15		18		15	–
100.6	15		18		15	–
100x.6	15		18		15	–

Voltage is in V.

18.5. LINES Input Voltage Range for Control Signals

For LGC variant.

Type of Slave Line	Voltage Range	Input Current Range
MOBALine	5–30 VAC	0.1–0.65 mA
Impulse, CODE	±12–30 V	0.25–0.51 mA
IRIG-B	0.2–2 Vpp	5–45 µA

19 Frequently asked questions

Here you will find answers to frequently asked questions.

19.1. General Questions

How can I tell if the clock is not synchronized?

The colon(s) will start blinking. The default timeout for indication of state without synchronization is **24 hours** .

You can set your own timeout in hours, see chapter **Synchronization Settings** > **Timeout for Indication of State without Synchronization** .

How to exit “Power OFF” mode?

To exit “Power OFF” mode, either press push-button PB1L or PB2L , or DISP button on IR remote controller.

How to reset the digital clock to factory settings?

If the clock is fully operational :

Enter the SYSt menu item c 1 (see chapter **Factory Reset to Default Values** > **Factory Reset Using Menu**). Set the value to 1 and confirm entered value. The FAC inscription will flash on display, and by confirming the clock will reset to default values.

If the clock is not responding or has entered a reset loop :

You need to do the factory reset using push-buttons (see chapter **Factory Reset to Default Values** > **Factory Reset Using Push-Buttons**).

19.2. Local Time Calculation Questions

I have digital clock synchronized by a DCF receiver or controlled by a MASTER clock. How to configure the calculation of local time?

Internal timezone table is not used. To show correct local time, set following items to values:

1. Navigate to SYNC menu item o 1 and set it to value A . That ensures the timezone is taken over according to the source of synchronization.
2. Navigate to SYNC menu item o 2 and set it to value 2 – 9 , 11 or A (autodetection). Select your synchronization type.
3. Navigate to SYNC menu item o 4 and disable the MOBALine timezone (set value 0).
4. Navigate to SYNC menu item o 5 and disable the MOBATIME server timezone (set value 0).
5. Navigate to dISP menu item d 2 and set it to value A (automatically set timezone). Time and date is displayed according to source of synchronization including daylight saving time.

I have digital clock controlled by a MASTER clock as MOBALine SLAVE clock and I want to use MOBALine timezones. How to configure the calculation of local time?

To show correct local time, set following items to values:

1. Navigate to SYNC menu item o1 and set it to value A . That ensures the timezone is taken over according to the source of synchronization and the UTC time calculation is basend on the MOBALine information.
2. Navigate to SYNC menu item o2 and set it to value 4 (MOBALine synchronization type).
3. Navigate to SYNC menu item o4 and set your **desired MOBALine timezone** (values 1 – 20).
4. Navigate to d15P menu item d2 and set it to value A (automatically set timezone). Time and date is displayed according to chosen MOBALine timezone including daylight saving time.

I have NTP, PoE, WiFi or WiFi5 variant of digital clock controlled by MOBATIME NTP servers. How to configure the calculation of local time?

To show correct local time, set following items to values:

1. Navigate to SYNC menu item o1 and set it to value A (automatically set timezone). NTP protocol then uses UTC time.
2. Navigate to SYNC menu item o2 and set it to value A (autodetection).
3. Navigate to SYNC menu item o5 and set your **desired MOBATIME server timezone** (values 1 – 15).
4. Navigate to d15P menu item d2 and set it to value A (automatically set timezone). Time and date is displayed according to chosen MOBATIME server timezone including daylight saving time.

I need to display another timezone than timezone provided by the synchronization source. How to set the desired timezone?

To set desired timezone, set following items to values:

1. Navigate to SYNC menu item o1 and set it to value 0 – 64 or A (automatically set timezone). Set the value according to the timezone in which the source of synchronization works.

   See chapter **Timezones Table** .

   Value 2 for DCF in west Europe or value A for NTP synchronization

   Value A only for synchronization working with UTC time.

2. Navigate to SYNC menu item o2 and set it to value 1 – 11 or A (autodetection). Select your synchronization type.
3. Navigate to SYNC menu item o4 and disable the MOBALine timezone (set value 0).
4. Navigate to SYNC menu item o5 and disable the MOBATIME server timezone (set value 0).
5. Navigate to d15P menu item d2 and set it to value 0 – 64 or A (automatically set timezone). Time and date is displayed according to calculation from the UTC time according to desired timezone including daylight saving time.

Headquarters/Production *Sales Worldwide*	Tel. +41 34 432 46 46 | Fax +41 34 432 46 99 moserbaer@mobatime.com | www.mobatime.com
Sales Switzerland	MOBATIME AG | Stettbachstrasse 5 | CH-8600 Dübendorf Tel. +41 44 802 75 75 | Fax +41 44 802 75 65 info-d@mobatime.ch | www.mobatime.ch MOBATIME SA | En Budron H 20 | CH-1052 Le Mont-sur-Lausanne Tél. +41 21 654 33 50 | Fax +41 21 654 33 69 info-f@mobatime.ch | www.mobatime.ch
Sales Germany/Austria	BÜRK MOBATIME GmbH Postfach 3760 | D-78026 VS-Schwenningen Steinkirchring 46 | D-78056 VS-Schwenningen Tel. +49 7720 / 85 35 - 0 | Fax +49 7720 / 85 35 - 11 buerk@buerk-mobatime.de | www.buerk-mobatime.de