User Manual

HN 60.R

Rack Master Clock

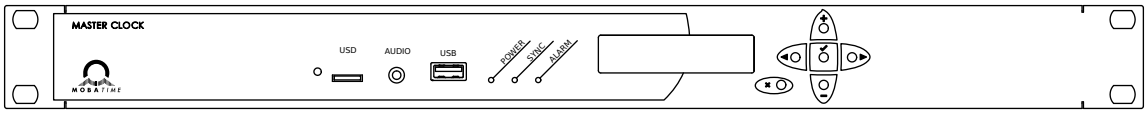

Scan the QR code or enter following URL to get the latest version:
https://docs.mobatime.cloud/HN-60.R

BE-801444.7-HN 60.R | 2026-10-14

Regulations and Certification

The device fulfils the requirements of the following standards:

Eletrical safety	EN 62368-1 ED.2
EMC	EN 55032 ED.2; EN 55035; EN 50121-4 ED.4

This product was developed and produced with the following EU directives:

EMC	Electromagnetic compatibility directive **2014/30/EU**
LVD	Low voltage directive **2014/35/EU**
RED	Radio equipment directive **2014/53/EU**
RoHS II	Restriction of the use of certain hazardous substances directive **2011/65/EU**
WEEE	Waste electrical and electronic equipment directive **2012/19/EU**
REACH	Chemical substance directive **ES 1907/2006**

See Conformity for the declaration of conformity of this specific product. This produst may offer a CB test certificate on request.

Important Notes

1. Please read and follow the safety information in this document before operating the product. We cannot guarantee that no accidents or damage will occur to improper use of this product. Please use this product with care and operate at your own risk.
2. We are not liable for any direct or indirect damage caused by the use of this document or the said product.
3. This product must be connected and installed by qualified electrician who is familiar with the relevant regulations (e.g. VDE).
4. The information in this document is subject to change without notice. The latest version of this document is available for download at https://docs.mobatime.cloud/HN-60.R/user-manual/pdf .
5. This User Manual has been composed with the utmost care to explain all the details to ensure a safe and stable operation of this product. Nevertheless, if question arise or error appear, feel free to contact support.
6. No part of this document or the said product may be reproduced in any form or by any means or used to make any derivative such as translation, transformation, or adaption without permission from ELEKON, s.r.o., Brněnská 364/17, Vyškov 682 01 / CZECH REPUBLIC.
7. Copyright © 2026 ELEKON, s.r.o., Brněnská 364/17, Vyškov 682 01 / CZECH REPUBLIC. All rights reserved.

Table of Contents

1. Safety ... 7

1.1. Instructions and Symbols ... 7

1.2. General ... 7

1.3. Installation ... 8

1.4. Operation ... 8

1.5. Maintenance and Cleaning ... 9

1.6. Disposing ... 9

1.7. Warranty ... 9

2. Overview ... 10

2.1. Basic Properties ... 10

2.2. Time-Base ... 10

2.3. Slave Line ... 10

2.4. Switching Channels ... 10

2.5. Operation Reserve ... 11

2.5.1. Passive ... 11

2.5.2. Active ... 11

2.6. Other I/O ... 11

2.7. Daylight Saving Time Processing ... 11

3. Installation ... 12

3.1. Installation Procedure ... 12

4. Connection ... 13

4.1. Terminal Board Connection ... 13

4.1.1. Terminal Description ... 13

4.2. Slave Line Connection ... 14

4.2.1. Analogue Clock ... 14

4.2.2. Digital Clock ... 15

4.3. DCF Connection ... 16

4.3.1. Installation ... 12

4.4. Switching Channel ... 19

4.5. Connection of Striking Module ... 20

4.6. Synchronization of Sub-Master Clock Using DCF Current Loop ... 21

4.7. Output Blocking ... 21

5. Information Screens ... 23

5.1. Screen MASTER ... 23

5.1.1. Manually Set the Time and Date ... 24

5.2. Screen LINE ... 25

5.2.1. Setting the Time of Slave Line ... 26

5.3. Screen CHANNEL ... 27
5.3.1. Controlling by Active Weekly Program or Manually ... 28
5.3.2. Channel Switches According to Calculated Sunrise and Sunset Times ... 28
5.3.3. MUTE Screen – Advance / Delay Switching Before / After Audio Output ... 29
5.4. Screen STRIKING ... 29
5.4.1. Striking on Bells or Dulcimers ... 30
5.4.2. Audio Striking ... 30
5.5. Screen SYNCHRONIZATION QUALITY ... 31
5.5.1. DCF ... 32
5.5.2. MSF ... 32
5.5.3. WWVB ... 33
5.6. Screen ALARMS ... 33
5.6.1. Alarm Structure ... 34
5.6.2. List of Possible Alarms ... 35
5.7. Screen VERSION ... 35

6. Main Menu ... 37
6.1. Synchronization Settings ... 37
6.1.1. Options ... 38
6.2. Time Zone Settings ... 38
6.3. Slave Line Settings ... 39
6.3.1. Line Type Settings ... 40
6.3.2. Line Status Settings ... 41
6.3.3. Minute Hand Movement Settings ... 42
6.3.4. Offset Settings ... 42
6.4. Channel Settings – Channel Parameters ... 43
6.4.1. Program / Manually ... 44
6.4.2. Switching Illumination by Calculated Sunrise and Sunset Time ... 45
6.4.3. Switching MUTE Signal ... 46
6.5. Weekly Program ... 47
6.5.1. View and Edit Program Records for CH Switch Channel ... 48
6.5.2. View and Edit AUD Program Audio Recordings ... 50
6.6. Striking ... 51
6.6.1. Classic Striking on the Bells or Dulcimers ... 52
6.6.2. Audio Striking ... 53
6.7. Load Channels ... 54
6.8. Output Blocking ... 55
6.8.1. Setting of the Added Output Blocking Time ... 56
6.8.2. Selection of Control Contact Type ... 56

7. Service Menu ... 58
7.1. Current Limits ... 58
7.1.1. Default Values ... 59
7.1.2. Limits for Outputs ... 60
7.2. Line Parameters ... 60
7.2.1. Default Values ... 61

7.2.2. Available Values 61
7.3. Language 61
7.3.1. Available Languages 62
7.4. Week Correction 62
7.5. Delete Memory 63
7.5.1. Available Options 64
7.6. Firmware Update 64
8. Technical Data 66
8.1. Basic Data 66
8.2. Power Supply – Parameters and Options 67
9. Time Zones Table 69

1 Safety

Read the safety instructions carefully and follow all the instructions. This ensures safe and reliable operation of this device.

1.1. Instructions and Symbols

Symbols used throughout this document and their meaning are as follows:

A note or important information.

Answer to a possible question. Contact information.

Keep away from children and people with limited physical, sensory, or mental capacities.

Action needs to be taken.

Connect device to earth ground.

More information included in the manual.

Disconnect mains power before doing anything.

An example or a hint.

Additional references or information.

Attention of electrical shocks.

Surface may be hot.

Item is flammable.

A warning, be cautious.

Recyclable materials.

Do not put in trash.

1.2. General

For safety and licensing reasons, unauthorized modifications and/or changes to the product is prohibited. Maintenance, adjustments or repairs may only be carried out by the factory (copyright holder).

This product is not a toy; it does not belong in the hands of children. Mount or place the product so that it cannot be reached by children. Children may try to insert objects into the product. The product will not only be damaged, but there is also a risk of injury, as well as danger to life through electric shock.

Never open the housing of this product, for it poses mortal danger from electric shock or may even cause a fire.

Keep packaging such as plastic films away from children. There is the risk of suffocation of misused.

Use caution with the product, knocks, blows, or even falls from a low height can damage it.

In industrial facilities, the accident prevention regulations of the trade associations for electrical systems and equipment must be observed.

Do not use the product if it is damaged. It can be assumed that safe operation is no longer possible, if:

- The product has visible damage.
- The product is not working properly (thick smoke or a burning smell, audible crackling noise, discoloration of the product or surrounding areas).
- The product was stored under adverse conditions.
- Tough conditions during transport.

Improper handling of this product operated on the mains voltage can cause mortal danger from electric shock!

Interconnection or combining equipment bearing a CE label does not inevitably result in a system that conforms with the safety regulations. Integrators will have to reassess the new product's compliance according to the locally valid directives. See section Conformity for more information on certifications of this product.

1.3. Installation

This product must be connected and installed by a qualified electrician who is familiar with the relevant regulations (e.g. VDE).

Never plug the product into voltage / power supply immediately after it has been moved from cold into warm environment (e.g. during / after transport / unboxing). The resultant condensed water may damage the product or may cause electric shock.

Allow the product reach the ambient temperature. Wait until the condensation has evaporated, this can take a few hours. Only then can the product be connected to the voltage / current supply and put into operation.

1.4. Operation

Use the product in the specified environment. Use outside of the specifications can damage the product and/or stop any operation.

The product may not be exposed to extreme temperatures, direct sunlight or strong vibrations. Protect the product from moisture, dust and dirt.

Operation in environments with excessive dust, flammable gases, vapours or solvents is not permitted. It may cause explosion or fire.

- Do not overload the product. Note the input / output voltage and currents as well as output powers indicated on the product.
- Depending on the input currents and input voltages, suitable connecting cables with appropriate cable diameter must be used. Only use the plugs and connectors supplied in the original packaging with the product.

1.5. Maintenance and Cleaning

- If the product and/or the connecting cable is damaged, do not touch it: there is mortal danger from electric shock! First, turn off the power supply to all poles of the product. Verify the absence of voltage using an appropriate meter.
- For the end consumer, the product is maintenance-free. Leavy any maintenance to an expert. Repairs may only be done by the factory itself (copyright holder).
- For external cleaning one can use a clean, soft, dry cloth. Dust can be easily removed with a clean, soft brush and a vacuum cleaner.

1.6. Disposing

At the end of its lifecycle, do not dispose of this device in the regular household rubbish. Return it to the supplier who will dispose of it correctly.

The user is lawfully obligated to return unusable batteries. **Disposal of used batteries through household waste is prohibited!** Batteries which contain dangerous substances are labelled with a picture of crossed out trash bin. The symbol means that this product may not be disposed through household waste.

Unusable batteries can be returned free of charge at appropriate collection points of your waste disposal company or at shops that sell batteries. By doing so, you fulfil your legal responsibilities and help protect the environment.

This product was packed and stuffed with proper materials to protect it during transportation. Packaging materials can be recycled and should be disposed environmentally friendly.

1.7. Warranty

The device is intended for a normal operational environment according to the corresponding norm.

The following circumstances are excluded from the warranty:

- Inappropriate handling or interventions.
- Chemical influences.
- Mechanical defects.
- External environmental influences (natural catastrophes, etc.)

Repairs during and after warranty period are assured by the manufacturer.

2 Overview

The “mini” master clock is a device used to controll small-scale system of unified time, with up to 20 pieces of slave clocks and up to 8 pieces of school bells (signalling devices).

The clock is mounted onto rack (height 1U) and is finding its use mostly in schools and plants of reduced size.

2.1. Basic Properties

- LCD display with 2x16 characters.
- Easy operations using 6 buttons located on the front panel.
- Well-arranged user-friendly menu.
- Multi language support.
- Monitoring quality of DCF 77, WWVB, or MSF signal.
- Possibility of configuration for any time zone.
- USB connector for connection of Flash memory drive with saved switching programs.
- Powered by mains 115 or 230 VAC or by DC power 12 or 24 VDC.
- Striking and audio striking functions.

2.2. Time-Base

- The clock is controlled by a microprocessor and locked to its own precise quartz time base.
- Local time calculation with automatic DST: entry of desired time zone from time zone table.

2.3. Slave Line

1 slave line (24 V) with total load of 150 mA, freely adjustable for the transmission of:

- MOBALine.
- Polarized minute impulses (12 / 24 V, bipolar / unipolar).
- Polarized half-minute impulses (12 / 24 V, bipolar / unipolar).
- Polarized second impulses (12 / 24 V, bipolar / unipolar).
- MOBATIME serial code.

The impulse length, gap length and cycle type can be set for all types of impulse lines.

2.4. Switching Channels

2 programmable relay contacts, freely configurable for switching based on:

- Weekly program cycle with up to 399 programmable lines.
- Astronomical calendar with sunrise and sunset calculation based on entry of geographical coordinates.
- Manual switching with various modes (ON / OFF, push-buttons, timer).
- MUTE switching.

2.5. Operation Reserve

2.5.1. Passive

- Internal backup battery for RTC in case of power loss.
  - As soon as the power becomes resumed, the slave clocks adjust automatically and in an accelerated mode to the proper time, the channel stat corresponds to the actual time.

2.5.2. Active

- Internal circuit for chargind the accumulators.
- Optional external maintenance-free lead-acid batteries.
- Energy saving mode to save the back-up battery.

2.6. Other I/O

- Input for connection of DCF, WWVB or MSF receiver.
- SMA connector for external GPS antenna and synthetic passive DCF output.
- Output 24 VDC with adjustable current limit to 200 mA (for powering of bells or other devices), can serve as 24 VDC power input alternatively.
- Terminal for connection of external backup battery with adjustable current limit.
- Mono audio output.
- GPIO with striking (up to two tones) and carillon (up to four tones, on request) functions.

2.7. Daylight Saving Time Processing

- Via DCF receiver.
- Respecting time zone settings.

3 Installation

The following places should be avoided:

- Within the reach of high voltage operated equipment.
- Places exposed to direct impact of solar radiation.

3.1. Installation Procedure

1. Mount the clock into a 19" rack cabinet.
2. Terminate all supply cables on the rear side (230 V power supply via EURO connector).
3. Connect the DCF receiver, Slave clock line cables, switch circuit and power cable.
4. Switch-on 230 V mains power. The current time is displayed on the Master clock.

4 Connection

4.1. Terminal Board Connection

Rear Panel

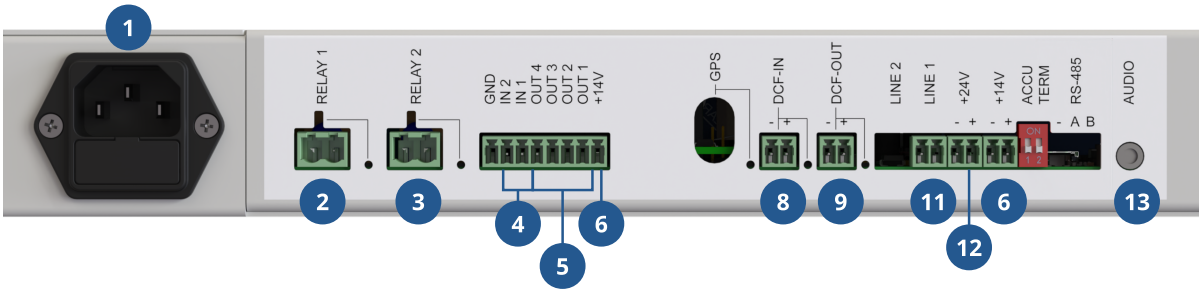

Front Panel

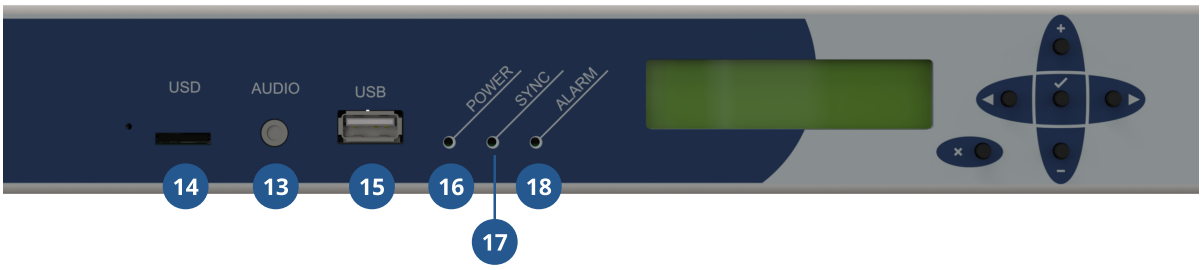

4.1.1. Terminal Description

1. EURO connector with MST fuse T200 mA / 250 V, for connection to 230 VAC, 50 Hz power supply

2. **RELAY 1**
   Switching output, 250 VAC, 6 A, 1500 VA; with the possibility of program or manual switching

3. **RELAY 2**
   Switching output, 250 VAC, 6 A, 1500 VA; with the possibility of program or manual switching

4. **IN 2–IN 1**
   Universal switching inputs

5. **OUT 4–OUT 1**
   Universal switching outputs type OC (Open Connectors)

6. **+14V**
   14 V output for powering external devices

8. **DCF-IN**
   DCF input

9 **DCF-OUT**
Synthetic DCF output

11 **LINE 1**
Slave line 1

12 **+24V**
24 V output for powering external devices (e.g. school bells)

13 **AUDIO**
Line audio output, 3.5 mm jack connector

14 **uSD**
MicroSD connector for inserting a memory card (not supported)

15 **USB**
USB-A connector for connecting a flash drive

16 **LED POWER**
Indication of power supply

17 **LED SYNC**
Indication of synchronization state

18 **LED ALARM**
Indication of active alarm

4.2. Slave Line Connection

Connect the Slave clock line to terminal **L1** . The Slave line is connected in a cascade (daisy-chain) configuration.
Set the type of Slave line depending on the type of clock.

For minute impulse line:

The minute impulse line may cause the first pulse to be ignored, resulting in one-minute delay.
If this situation occurs, it is necessary to **reverse the polarity on the affected clock** while the line is **stopped** – reverse the polarity of the connection cable. Afterwards, it is essential to **manually set the time on the affected clock** to the exact correct time.

4.2.1. Analogue Clock

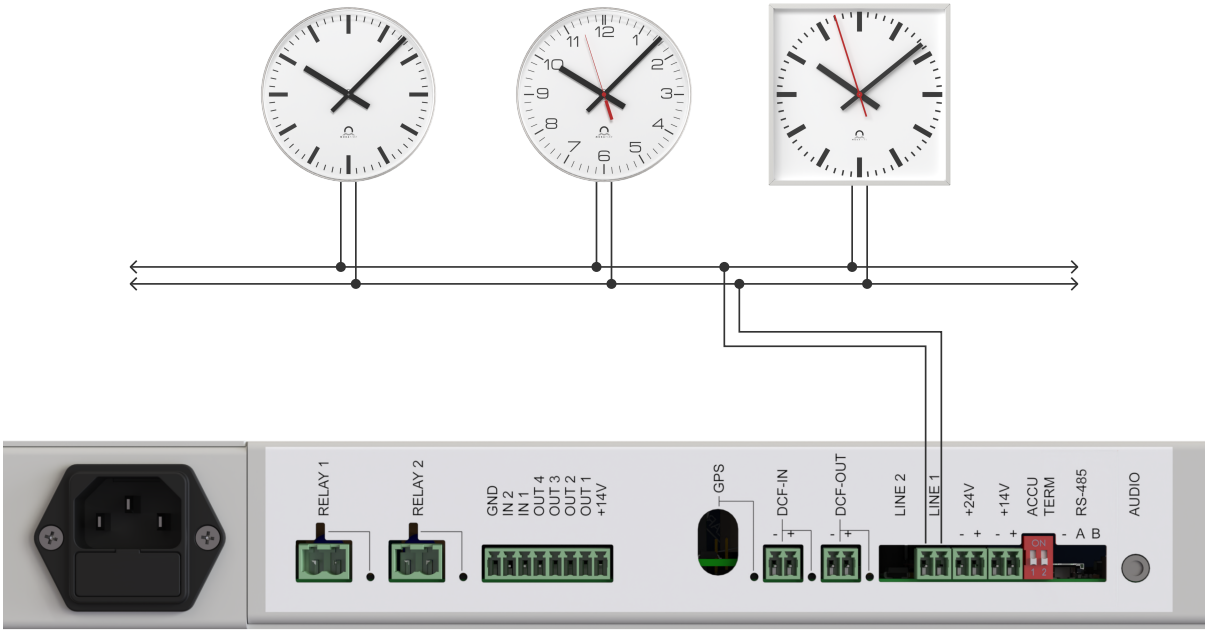

It is important to check your analogue clock movement type **before** you connect the clock to the terminal **L1** . Connecting the clock to incorrectly set slave line may cause damage to the analog clock movements.

4.2.2. Digital Clock

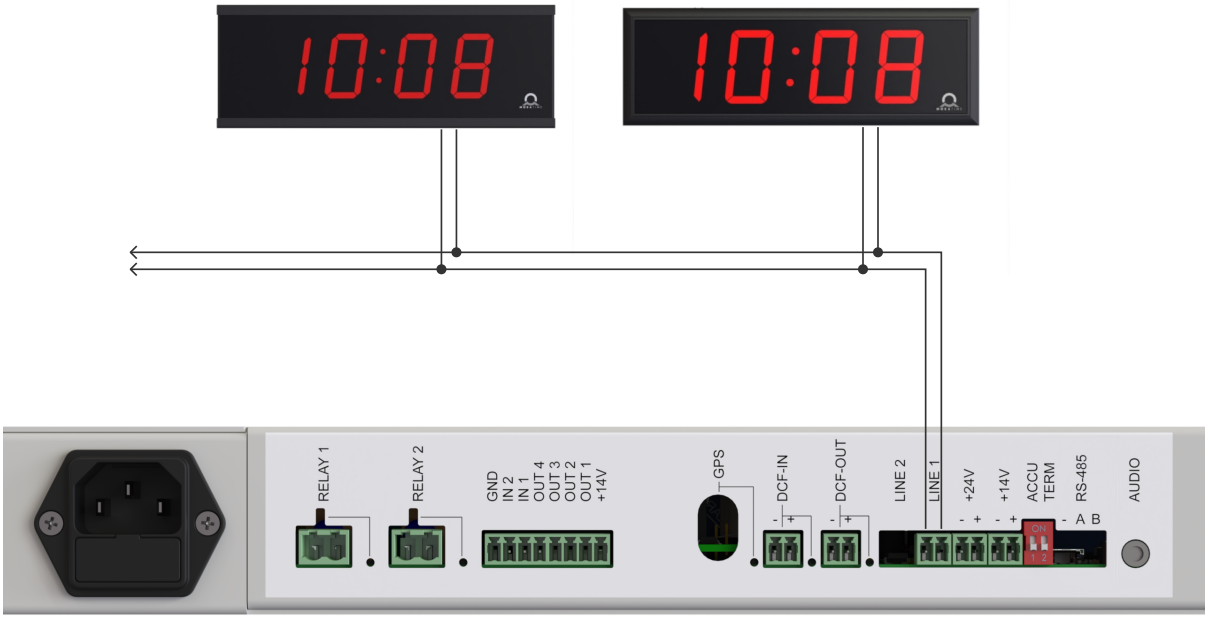

It is important to check the terminals on the clocks PCB **before** you connect the clock to the terminal **L1** . Connecting the clock to incorrectly set slave line may cause damage to the clock electronics.

Generation 3 Digital Clock

Switch the JP11 (Jumper **Line Type**) on clock PCB to desired Slave line type.

For detailed instruction, please see generation 3 digital clock user manual.

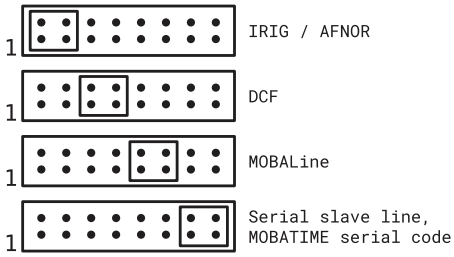

Generation 4 Digital Clock

For detailed instructions, please navigate to https://docs.mobatime.cloud website. Open your desired digital clocks and navigate to **Mounting → Cable Connection** chapter.

Switch the DIP switch on clock PCB to LINES position.

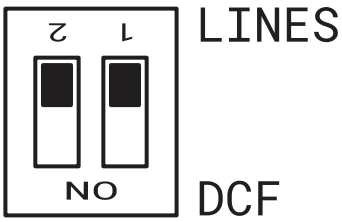

4.3. DCF Connection

The DCF receiver server for fully automatic adjustment and synchronization of time using the DCF radio signal with a coverage withing the diameter of 1500 km around the Germany city Frankfurt am Main.

Comprehensive information about time and date is then transferred into the DCF transmitter located in Mainflingen near to Frankfurt. The transmitter transmits long-wave signals at 77.5 kHz frequency.

The DCF receiver guarantees absolutely precise time data with automatic transition to the daylight saving time.

4.3.1. Installation

4.3.1.1. AD 650

See the AD 650 user manual for more information: https://docs.mobatime.cloud/AD-650/

The AD 650 receiver is supplied with a 10-meter cable. The maximum total cable length is 200 meters (connected via twister pair).

1. Install the AD 650 receiver to desired place.

   Do not install the AD 650 receiver close to buildings consisting of metallic steel structures, near to PCs, TV and radio receivers or in places surrounded with thick walls or into underground or cellar areas.

2. Connect the cable to terminals according to the image and connection table below:

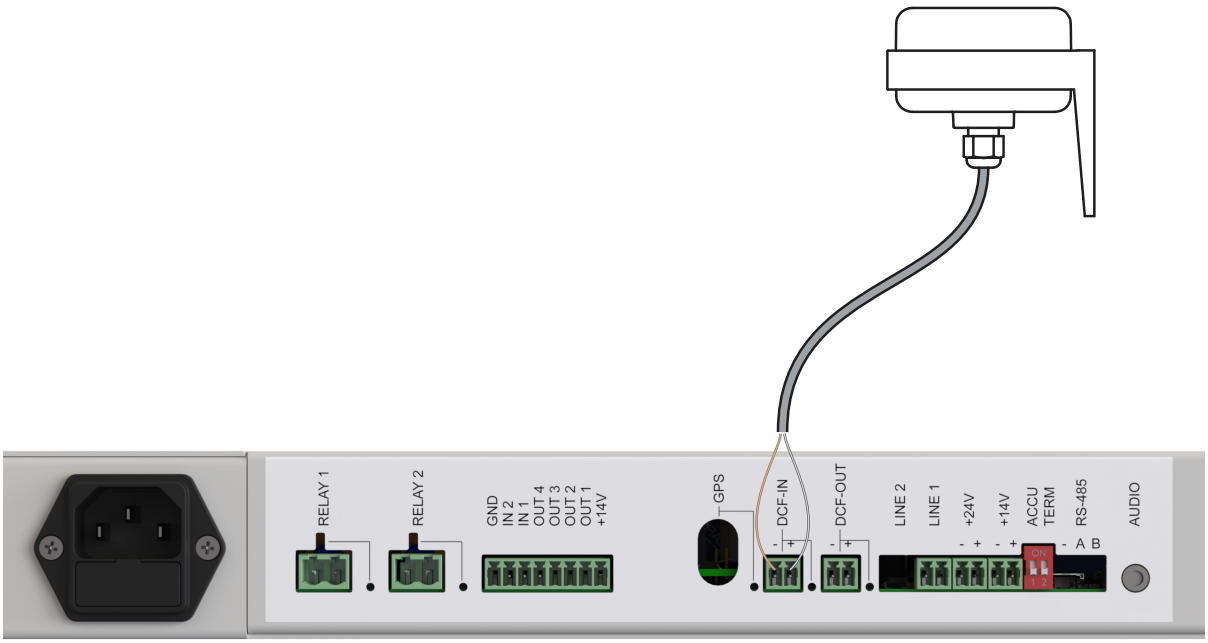

Wire Color and Connection Table

Wire color	HN 60.R terminal
Brown	DCF in +
White	DCF in –

4.3.1.2. DCF 4500

The DCF 4500 receiver is supplied with a 10-meter cable. The maximum total cable length is 200 meters (connected via twister pair).

1. Install the DCF 4500 receiver to desired place.

Do not install the DCF 4500 receiver close to buildings consisting of metallic steel structures, near to PCs, TV and radio receivers or in places surrounded with thick walls or into underground or cellar areas.

2. Connect the cable to terminals according to the image and connection table below:

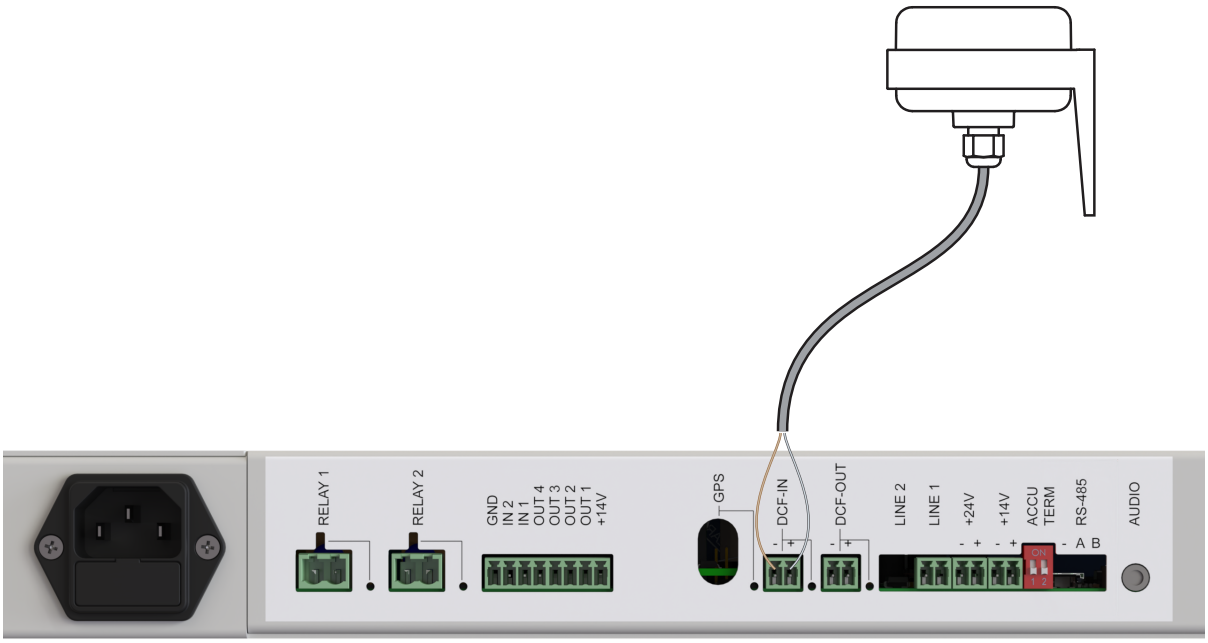

Wire Color and Connection Table

Wire color	HN 60.R terminal
White	DCF in +
Brown	DCF in –

4.3.1.3. GNSS 4500

The GNSS 4500 receiver is supplied with a 10-meter cable. The maximum total cable length is 200 meters (connected via twister pair).

1. Install the GNSS 4500 receiver to desired place.

Do not install the GNSS 4500 receiver close to buildings consisting of metallic steel structures, near to PCs, TV and radio receivers or in places surrounded with thick walls or into underground or cellar areas.

2. Connect the cable to terminals according to the image and connection table below:

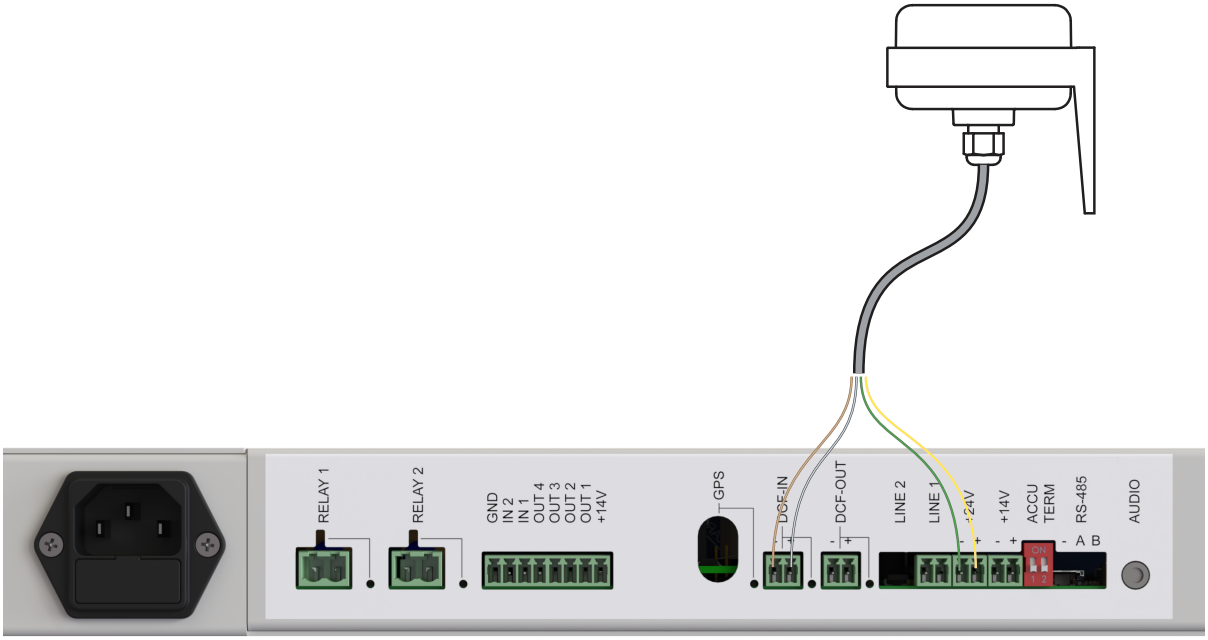

Wire Color and Connection Table

Wire color	HN 60.R terminal
Yellow	+24V
Green	24V–
White	DCF in +
Brown	DCF in –

4.4. Switching Channel

The **CH1** terminal (or RELAY 1) serves to control the externally connected equipment. School bells or external equipment can be powered with 24 VDC.

CH1 terminal parameters Max. 250 VAC, max. 6 A, 1500 VA

Connection of external devices with 230 VAC power supply

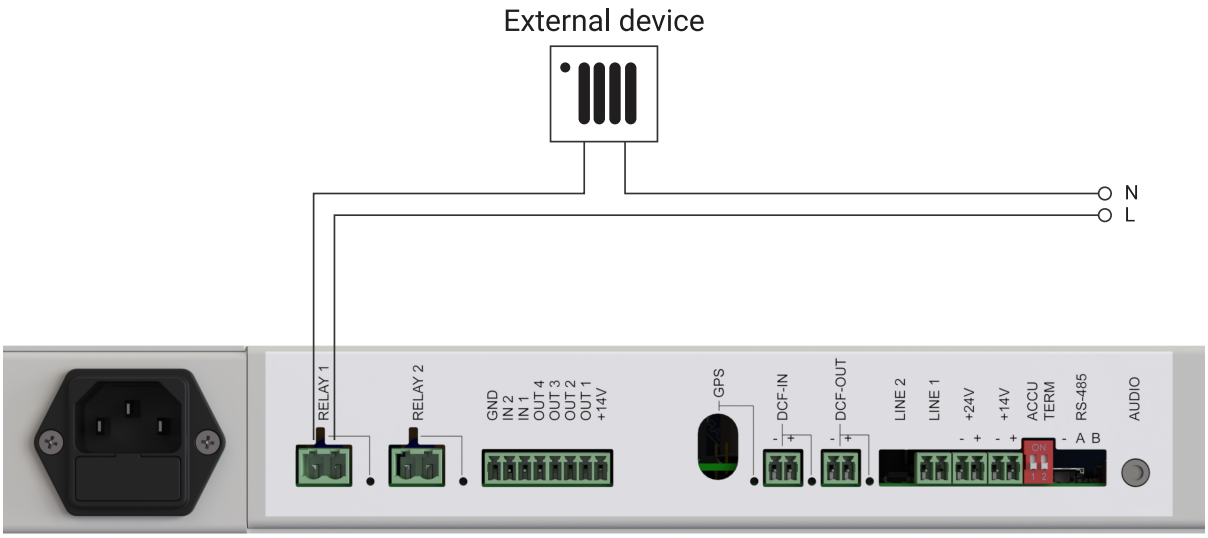

Connection of school bells

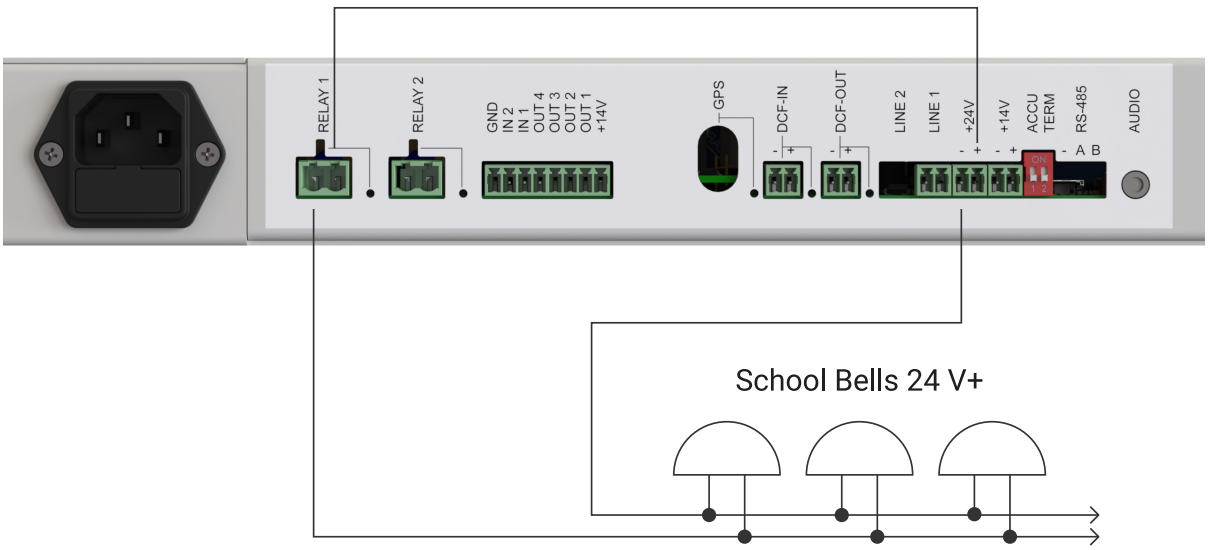

The **CH1** terminal is not suitable for connecting switching power supplies.

4.5. Connection of Striking Module

Striking module HN…SSR2 is compatible only with HN 6x series Master clock!

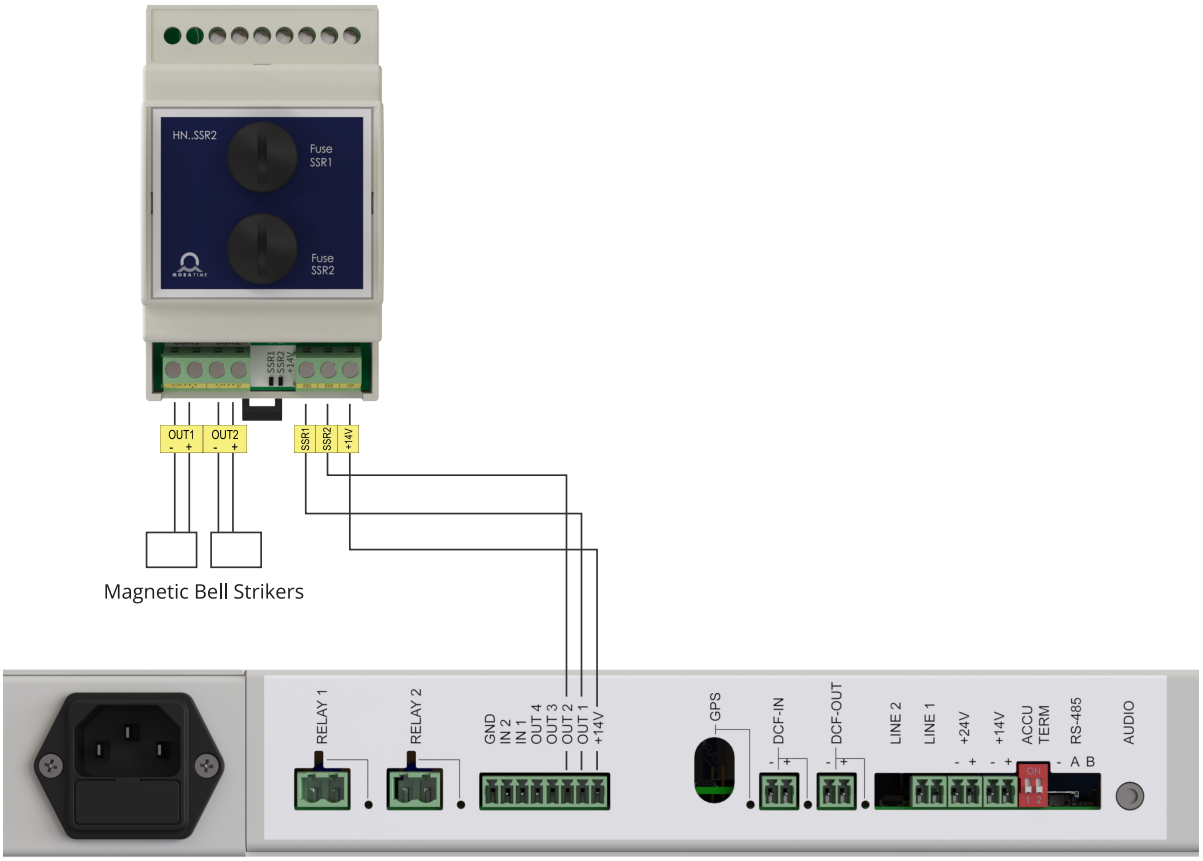

4.6. Synchronization of Sub-Master Clock Using DCF Current Loop

This connection is useful if you need to add another slave line.

The master clock with **+DCF out-** terminal serves as the source of synchronization signal for other master clock with **+DCF in-** terminal (e.g. in this case HN 60.R master clock).

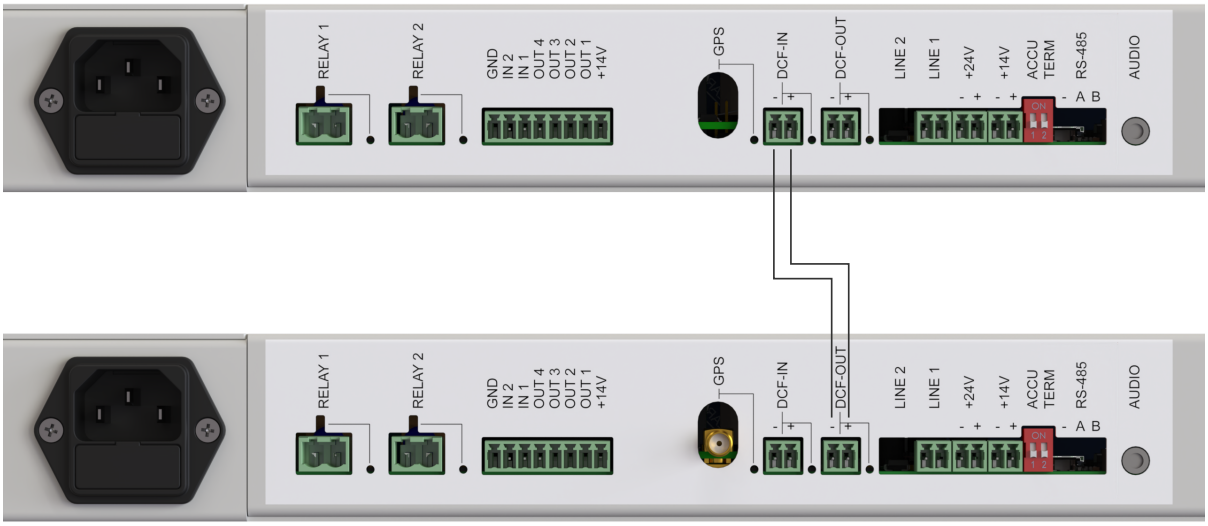

4.7. Output Blocking

This function is used to block the output function (striking) while the bells (e.g. death bell) are moving at the same time, so as not to damage the striking hammers or destroy the bell.

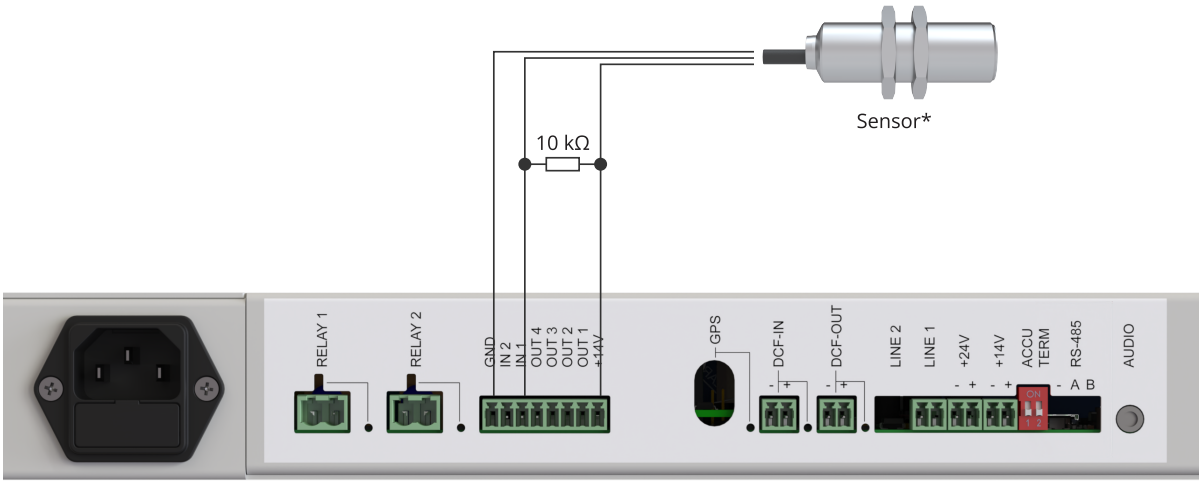

*** Sensor used:** Inductive sensor with NO output (e.g. BES M18MI-NSC80B-BV03)

The function is activated by a sensor connected to the Master clock. If the sensor detects the movement of the bell, its output closes and the main clock blocks the striking. Blocking takes place during sensor activation and set timeout (see Main Menu > Output Blocking chapter). After this time, the output is activated again.

5 Information Screens

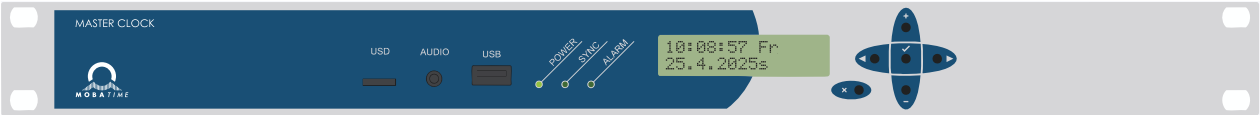

In the Basic Mode, you can scroll through the information screens on the LCD display.

MASTER	Time and date information, manual time and date adjustment.
LINE	Information about the state of slave line; time adjustment for the slave line.
CHANNEL	Information about the state of channel.
STRIKING	Status and striking settings.
	Displayed only if the striking is enabled.
SYNCHRONIZATION QUALITY	Information about the reception and the quality of the DCF synchronization signal.
ALARMS	Used for diagnostics and event overview.
VERSION	Information about Master clock model and SW version.

Button functions:

◄ ►	Switch between information screens
×	Return to MASTER screen

Buttons function is different for each screen.

5.1. Screen MASTER

Main / basic screen. From all “screens” you can jump back into the MASTER screen by operating the ✖ button.

The display shows following:

```
10:08:57 Fr I #♣
25.04.2025s  USB
```

`10:08:57`	Time
`Fr`	Day of week
`I`	Channel status indication (one or more are active)
`#`	Indication of some locked channels
`♣`	Indication of alarm(s) in alarm history
`25.04.2025`	Date
`s`	DST indication
`USB`	USB indication

Button function

–	Correction of seconds ±30 s: pressing **–** between 0–30 sec. resets the seconds to 00; between 31–59 sec., it rounds forward to 00 of the next minute
+	Enter to manual time and date setting
✔	Enter to `Main menu`
hold ✖ and press ✔	Manual channel switching

5.1.1. Manually Set the Time and Date

Set the time and date manually when operating without a DCF or a GPS receiver.

The display shows following:

```
00:00:00
01.01.2025
```

`00:00:00`	Time
`01.01.2025`	Date

Button function

✔	Save entered values and return to MASTER screen
✖	Exit without saving

Press the **+** button. The cursor flashes now on the position of the hours. Enter the time value in the `hh` → press the ► button → `mm` form using **+** and **–** buttons. The cursor in now blinking on the date position. Enter the date in the `dd` → press the ► button → `mm` → press the ► button → `yy` form.

Confirm the values set up by pushing the ✔ button.

Day of the week and DST status are set automatically according to the selected time zone. The setting is described in Time Zone Settings .

5.2. Screen LINE

This screen shows the operation state of the slave line (analogue or digital clock), to display this screen, press the ► button from the screen MASTER.

The display shows following:

```
L1        running
12:00         min
```

`L1`	Line
`running`	Line state
`12:00`	Line time
`min`	Line type

Button function

–	Stop / start slave line
+	Enter slave line time settings Impulse lines only.
✔	Enter slave line setting (see Slave Line Settings chapter)

Slave line states

`stop`	Line is stopped, it is possible to set the line time
`running`	Normal line operation
`fast fwd`	Accelerated catch-up time
`waiting`	Line in waiting mode; time necessary to correct the time of slave clocks is shorter than time necessary for accelerated catch-up cycle
`overload`	Line is overloaded or short circuit on line
`12pos+stop`	Accelerated catch-up cycle with automatic stop on 12:00

5.2.1. Setting the Time of Slave Line

Set the slave pulse line type in `stop` mode. Set the same time on all slave clocks before starting the line. Enter this time as the slave time.

To enter this setting, press the **+** button from screen LINE (see Slave Line Settings chapter).

Button function

◄►	Move between items
+ –	Switch flasing item (holding down the button will cycle through the options)
✔	Save edited values and return to LINE screen
✖	Exit without saving

Set the slave impulse line in following format:

Minute impulse line	`hh:mm`
Half-minute impulse line	`hh:mm:00` or `hh:mm:30`
Seconds impulse line	`hh:mm:ss`

5.3. Screen CHANNEL

This screen is displayed when push gradually the ► button from the screen MASTER.

5.3.1. Controlling by Active Weekly Program or Manually

The CH1 channel is set to this channel control mode by default.

The display shows following:

```
CH1 I # 10:08:57
push btn    001r
```

`CH1`	Selected channel
`I`	Channel state
`#`	Indication of channel lock
`10:08:57`	Channel time
`push btn`	Manual control mode
`001r`	Number of records

Button function

✔	Entry to the selection of week program for the purpose to edit (see Program / Manually chapter for details)
long press of –	Lock / unlock channel

5.3.2. Channel Switches According to Calculated Sunrise and Sunset Times

To assing channel CH1 to illumination switching, you first need to “free” the channel by changing its value to `---` in Program / Manually menu.

The display shows following:

```
CH1 I #  on20:59
Illu.   off04:59
```

`CH1`	Selected channel
`0`	Channel state
`#`	Indication of channel lock
`on20:59`	Time of illumination ON
`off04:59`	Time of illumination OFF

Button function

✔	Entry to the coordinate setting and channel switching on / off correction (see Switching Illumination by Calculated Sunrise and Sunset Time chapter for details)
long press of –	Lock / unlock channel

5.3.3. MUTE Screen – Advance / Delay Switching Before / After Audio Output

The display shows following:

```
CH2 0   10:08:57
mute
```

Button function

✔	Entry to advance / delay, before / after setting audio output (see Switching MUTE Signal chapter for details)
long press of –	Lock / unlock channel

5.4. Screen STRIKING

Striking can only be set for this clock if it has audio output for Audio striking or if it is equipped with the HN…SSR2 add-on module for classic bells or dulcimers.

Only one type of striking can be activated.

This screen is displayed when push gradually the ► button from the screen MASTER.

5.4.1. Striking on Bells or Dulcimers

Function only if striking is activated in the menu. Displays the time period when striking is off, the type of striking and that if its currently being striking.

The display shows following:

```
Striking   S1  #
Off 22-06    1/4
```

`S1`	Running striking: • on OUT1 – S1 • on OUT2 – S2
`#`	Indication of striking lock
`Off 22-06`	Striking off period
`1/4`	Type of striking

Button function

✔	Entry to striking configuration menu (see Classic Striking on the Bells or Dulcimers chapter for details)
long press of –	Lock / unlock striking functions

5.4.2. Audio Striking

Functional only if striking is activated in the menu. Displays the time period when striking is off and the type of striking.

The display shows following:

```
Audio Striking #
Off 22-06    1/4
```

`#`	Indication of striking lock
`Off 22-06`	Striking off period
`1/4`	Type of striking

Button function

✔	Entry to striking configuration menu (see Audio Striking chapter for details)
long press of –	Lock / unlock striking functions

5.5. Screen SYNCHRONIZATION QUALITY

This screen is displayed when push gradually the ► button from the screen MASTER.

The value in `%` indicates the reception quality of the last hour if the synchronization was successful at least once.

The percentage value is displayed only after the first successful synchronization.

If the `IN1+DCF` synchronization type is enabled, this screen will appear twice.

An asterisk (`*`) and a space are inserted between `IN1` / `DCF` and `sign` , indicating the currently active synchronization source:

```
DCF  sign.: 100%
Bit:1 No:57 Ok:3
```

↓

```
IN1* sign.: 100%
Bit:1 No:57 Ok:3
```

5.5.1. DCF

The display shows following:

```
DCF  sign.: 100%
Bit:1 No:57 Ok:3
```

`100%`	Signal quality as a percentage in the last hour
`Bit:1`	Last received bit (`1` , `0` or `-`)
`No:57`	Number of second marks (0–58)
`Ok:3`	Counter of identical telegrams (0–9)

5.5.2. MSF

The display shows following:

```
MSF sign.:  100%
Bit:1 No:57 Ok:3
```

`100%`	Signal quality as a percentage in the last hour
`Bit:1`	Last received bit (`1` , `0` or `–`)
`No:57`	Number of second marks (0–58)
`Ok:3`	Counter of identical telegrams (0–9)

5.5.3. WWVB

The display shows following:

```
WWVB sign.: 100%
Bit:1 No:57 Ok:3
```

`100%`	Signal quality as a percentage in the last hour
`Bit:1`	Last received bit (`1` , `0` or `–`)
`No:57`	Number of second marks (0–58)
`Ok:3`	Counter of identical telegrams (0–9)

5.6. Screen ALARMS

Added in version v1.0.0.

Displays the current alarm word and the number of active alarms (memory for up to 50 alarms).

The display shows following:

```
Alarms:  7
0x0081
```

`Alarms: 7`	Number of active alarms
`0x0081`	Current alarm word

Button function

✔	Entry into alarms view
long press of –	Remove alarms history

5.6.1. Alarm Structure

To see alarm details, press the ✔ button. To show older alarms, gradually press the + button.

When the oldest alarm is reached, pressing the + again returns to screen ALARMS. By pressing the × button during browsing between older alarms, you will also return to screen ALARMS.

Every alarm is marked with symbol 🔔 or ⁑ , its name and time and date.

The display shows following:

```
AL ⁑    Power on
02.05.  10:08:57
```

or

```
AL 🔔    24h sync
25.04.  10:08:57
```

⁑	Indicates an alarm cancellation (deactivation)
🔔	Indicates an alarm occurence (activation)
`Power on`,`24h sync`	Alarm name
`02.05.`,`25.04.`	Date
`10:08:57`	Time

5.6.2. List of Possible Alarms

- `DCF sync`
- `DCF+I1 sync`
- `ACCU ovr`
- `VDC ovr`
- `24h sync`
- `Power on`
- `Calibration`
- `L1 overload`

5.7. Screen VERSION

This screen is displayed when push gradually the ► button from the screen MASTER.

The display shows following:

```
HN60.R.S4
v1.4.0    0x0081
```

`HN60.R.S4`	Type of Master clock
`v1.4.0`	Software version (current as of 14.10.26)
`0x0081`	Status code

Button function

✔	Entry into service menu

Entry into service menu only for service purposes!

6 Main Menu

Press the ✔ button to enter the `Main menu` from screen MASTER.
The display shows following:

```
Main menu
Time zone
```

Options

`Synchronization`	Set up synchronization source, see Synchronization Settings chapter
`Time zone`	Time zone configuration, see Time Zone Settings chapter
`Slave line 1`	Slave line parameters configuration, see Slave Line Settings chapter
`Channel setup`	Setting the switching channel parameters, see Channel Settings – Channel Parameters chapter
`Week program`	Edit the weekly program, see Weekly Program chapter
`Striking`	Setting the striking parameters, see Striking chapter
`Load channel`	Load a pre-loaded switching programs per USB into the Master clock, see Load Channels chapter
`Output blocking`	Striking output lockout configuration, see Output Blocking chapter

Button function

◄►	Switch between options
✔	Enter item setting
✖	Return to MASTER screen

6.1. Synchronization Settings

The synchronization type is preset to `DCF` .

In `Main menu` press the ► button to select `Synchronization` and proceed to enter its setting by pressing ✔ button.

The display shows following:

```
Type:        DCF
```

Button function

+ –	Change flashing item
✔	Save entered value and return to `Main menu`
×	Exit without save and return to `Main menu`

6.1.1. Options

Synchronization sources

`DCF`	DCF receiver (integrated output) synchronization – also see chapter DCF Connection
`MSF`	MSF receiver (DCF input) synchronization
`WWBV`	WWVB receivre (DCF input) synchronization
`IN1`	Synchronization by external synthetic DCF source – also see chapter Synchronization of Sub-Master Clock Using DCF Current Loop • e.g. for combination of Master clock with external GPS receiver
`IN1+DCF`	Synchronization by two DCF signals – signal redundancy • Primary signal source is `IN1` (e.g. external GPS receiver) • Switching to a secondary signal source (e.g. DCF receiver) occurs when the primary sihnal is lost • The switchback occurs after the primary signal is restored

6.2. Time Zone Settings

This functon is used to set time zones of slave line, channel, local time and synchronization source.

See all available MOBATIME time zones in Time Zones Table chapter.

In `Main menu` press the ► button to select `Time zone` and proceed to enter its setting by pressing ✔ button.

The menu contains two pages.

Page 1, the display shows following:

```
Line TZ:        2
Channel TZ:     2
```

Page 2, the display shows following:

```
Local TZ:       2
Sync TZ:        2
```

Button function

+ −	Switch between pages
✔	Enter item setting
×	Return to `Main menu`

Button function in ‘item edit’ mode

◄ ►	Move between items
+ −	Switch flasing item (holding down the button will cycle through the options)
✔	Save edited values and return to page view
×	Exit without save and return to page view

6.3. Slave Line Settings

Set the L1 Slave line parameters according to the type of connected Slave clock, enter the line type, pulse, gap length and cycle type.

In `Main menu` press the ► button to select `Slave line 1` and proceed to enter its setting by pressing ✔ button.

Before starting the system, always check that the line type matches the type of connected slave clocks. See chapter Slave Line Connection for details.

The menu contains four pages:

6.3.1. Line Type Settings

The display shows following:

```
L1      type:min
cykH imp15 gap15
```

`min`	Slave line type
`cykH`	Cycle
`imp15`	Line type length
`gap15`	Gap length

Button function in 'item edit' mode

◄►	Move between items
+ –	Switch flasing item (holding down the button will cycle through the options)
✔	Save edited values and return to page view
×	Exit without save and return to page view

6.3.1.1. Options

Slave Line Type

Select slave line type according to slave clock type:

`min`	For clocks controlled by minute impulses
`1/2m`	For clocks controlled by half-minute impulses
`sec`	For clocks controlled by second impulses
`code`	For clocks controlled by MOBATIME serial code
`MBL`	For clocks controlled by MOBALine

Cycle

Select pulse lines cycle according to mode in which slave clock operates:

`H`	Half-day, 12 hours (analogue clock)
`D`	Daily, 24 hours (digital clock)

Impulse Parameters

Impulse Line Length

Enter the pulse duration in tenths of seconds:

`imp(01-99)`	Pulse duration in tenth of seconds

Gap Length

Enter the length of gap between pulses in fast-forward mode in tenths of seconds:

`gap(01-99)`	Gap length in tenth of seconds

Recommended Default Values

Recommended default values for minute and half-minute lines:

`imp15`	Pulse lenght 1.5 s
`gap15`	Gap lenght 1.5 s

Recommended default values for second line:

`imp03`	Pulse lenght 0.3 s
`gap02`	Gap lenght 0.2 s

For second line, `imp` + `gap` must not be greater than `10` . If `imp` + `gap` equals `10` , then fast-forward mode is not possible.

6.3.2. Line Status Settings

The display shows following:

```
Set state
         running
```

Button function in ‘item edit’ mode

◄ ►	Move between items
+ –	Switch flasing item (holding down the button will cycle through the options)
✔	Save edited values and return to page view
×	Exit without save and return to page view

6.3.2.1. Line States

You can set following line states:

`run`	The line starts
`stop`	The line stops
`12pos+stop`	The line runs to 12:00 in fast-forward mode and then stops

If the MOBALine line type is set, stopping the line will set the analogue slave clock to 12:00 positions.

6.3.3. Minute Hand Movement Settings

This setting is available only if the slave line type is set to `MBL` (MOBALine).

The display shows following:

```
Min. hand mode
     continuous
```

Button function in ‘item edit’ mode

◄ ►	Move between items
+ –	Switch flasing item (holding down the button will cycle through the options)
✔	Save edited values and return to page view
×	Exit without save and return to page view

6.3.3.1. Movement modes

You can set following modes for MOBALine:

`continuous`	Continuous hands movement
`Minute`	Minute hand moves in steps of one minute
`1/2 minute`	Minute hand moves in steps of 1/2 minute

6.3.4. Offset Settings

In line can be set to time shifts version time on the Master clock – offset.

By default, the offset is set to `0` .

By setting a negative / positive value, the time on the line is delayed / overtaken by the value set on the set offset, e.g. at an offset value of `-1,00` secons, the time on the line is delayed by 1 second compared to the time on the Master clock

The display shows following:

```
Offset:    +9,99s
```

Button function in ‘item edit’ mode

◄►	Move between items
+ –	Switch flasing item (holding down the button will cycle through the options)
✔	Save edited values and return to page view
✖	Exit without save and return to page view

6.3.4.1. Settings the Offset

Shift range	-9.99 s to +9.99 s

Adjust step-by-step:

`+` / `-`	Positive / negative value
`0-9`	Units of seconds
`00-99`	Tens of miliseconds

Button functions:

◄►	Switch between pages
✔	Enter item setting
✖	Return to `Main menu`

6.4. Channel Settings – Channel Parameters

Use this function to set the channel switching mode.

In `Main menu` press the ► button to select `Channel setup` and proceed to enter its setting by pressing ✔ button.

The menu contains three pages:

6.4.1. Program / Manually

In `Main menu` press the ► button to select `Channel setup` and proceed to enter its setting by pressing ✔ button.

This menu is used to set the manual switching mode of the channel.

To assing channel CH1 to program / manuall switching, you first need to “free” the channel by changing its value to `---` in Switching Illumination by Calculated Sunrise and Sunset Time menu.

The display shows following:

```
Man            CH1
Push btn    0:00m
```

`Man`	Channel setting
`CH1`	Selected channel
`Push btn`	Switching mode
`0:00m`	Predefined period when timer is selected

Button function in ‘item edit’ mode

◄►	Move between items
+ –	Switch flasing item (holding down the button will cycle through the options)
✔	Save edited values and return to page view
✖	Exit without save and return to page view

6.4.1.1. Switching Mode Options

You can set following switching modes:

`timer`	By simultaneously pressing the ✖ and ✔ the channel will switch to predefined period 00:01–15:59 (MM:SS)
`on / off`	Press the buttons to turn on, press the buttons again to turn off
`Push btn`	The channel is switched on while the buttons are held (default)

6.4.1.2. Channel Selection

You can set following channels:

`CH1` - `CH2`, `AUD`, `---`

6.4.2. Switching Illumination by Calculated Sunrise and Sunset Time

In `Main menu` press the ► button to select `Channel setup` and proceed to enter its setting by pressing ✔ button.

Calculated times apply to the specified geographic coordinates. For places with specific conditions, it is possible to adjust the time for switching on and switching off the channel.

Adjusting the value to the positive value speeds up the evening switching-on and extends the switching-off time in the morning.

Example:

No correction	19:20–6:32
Correction +10 min	19:10–6:42
Correction -10 min	19:30–6:22

To assing channel CH1 to illumination switching, you first need to “free” the channel by changing its value to `---` in Program / Manually menu.

The display shows following:

```
Illu. CH3 K +00m
50°00'N  15a00'E
```

`Illu.`	Channel mode
`CH3`	Selected channel
`+00m`	Switch correction
`50a00´N`	Latitude
`15a00´E`	Longitude

6.4.2.1. Channel Selection

You can set following channels:

`CH1` - `CH2`, `AUD`, `---`

The channel cannot be selected if it is already set to manual switch or MUTE switching.

6.4.2.2. Lighting Switch Correction

You can set the lighting switch correction:

`-99m` to `+99m`	Range of lighting switch correction

6.4.2.3. Coordinate Range

You can set the coordinate range:

`0°00′` to `89°59′ N (S)`	Latitude
`0°00′` to `179°59′ E (W)`	Longitude

6.4.3. Switching MUTE Signal

The menu is used to set the switching of the MUTE signal of the external amplifier and its advance before and after the audio output. It can only be used with a clock with audio output.

The display shows following:

```
Mute CH2
pre: 10 post: 05
```

`CH2`	Selected channel
`pre: 10`	Advance before audio
`post: 05`	Delay after audio

6.4.3.1. Channel Selection

You can set following channels:

`CH1` - `CH2`, `AUD`, `---`

The channel cannot be selected if it is already set to manual switch or lighting switching.

6.4.3.2. Range of Advance / Delay

You can set the advance before / delay after audio:

`pre: 00-99`	(0,0–9,9 s) Advance before audio output (100 ms unit) e.g. `10` means that MUTE turns on a second earlier
`post: 00-99`	(0,0–9,9 s) Delay after audio output (100 ms unit) e.g. `05` means that MUTE switches off 500 ms after

Button functions:

◄►	Switch between pages
✔	Enter item setting
✖	Return to `Main menu`

6.5. Weekly Program

Allows you to edit switching program for the selected channel. Capacity of 399 program lines. Weekly program entries can be edited, added or deleted.

In `Main menu` press the ► button to select `Weekly program` and proceed to enter its setting by pressing ✔ button.

The display shows following:

```
Week program
CH1 005 records
```

`CH1`	Selected channel
`005`	Number of saved records for selected channel

Button function in 'item edit' mode

+ –	Channel selection: `CH1` – `CH2` , `AUD`
✔	Entry to view records
×	Return to `Main menu`

6.5.1. View and Edit Program Records for CH Switch Channel

Press ✔ to enter the records list. If there are no records in the switching program, `Blank list` is displayed.

```
xx:xx:00  I
xx.xx. *******
```

`xx:xx:00`	Time
`I`	Switching mode (on / off / pulse)
`xx.xx.`	Date
`*******`	Day of week: Mo–Su

6.5.1.1. Adding a New Record

The display will show either `Blank list` or an editable entry. Press **+** .

6.5.1.2. Deleting a Record

Use the ◄ ► buttons to select the desired record. Then press **–** .

Button function

◄►	Move between records
+	Add new record
–	Delete selected record
✔	Edit selected record
×	Return to channel selection

Button function in ‘item edit’ mode

◄►	Move between items
+ –	Switch flasing item (holding down the button will cycle through the options)
✔	Save edited record
×	Exit without save and return to list of records

6.5.1.3. Options

Enter following data step-by-step.

Time

`hh:mm:ss`	If you enter the value `xx` in the time field (`hh:mm`), this position will always be considered valid. • `xx:00:00` → the sequence will be active every full hour • `10:xx:00` → the sequence will be active every full minute of the tenth hour

Switching Modes

`I`	Switch on
`O`	Switch off
`sxx`	Channel will be switched on for specific duration (01–99 s); the duration is set in seconds (e.g. `s05` = 5 s)

Date

`dd.mm.`	If you enter the value `xx` in the date field (`dd.mm.`), this position will always be considered valid. • `xx.04.` → the command will be executed every day in April • `25.xx.` → the command will be executed every on the 25 th of each month

Day of Week

Program execution is set in days of week in order Monday → Tuesday → Wednesday → Thursday → Friday → Saturday → Sunday.

`*`	Day in which the program line will be executed
`–`	Day in which the program line will not be executed

6.5.2. View and Edit AUD Program Audio Recordings

Playback is possible only from connected USB Flash drive.
The display shows following:

```
xx:xx:00  I   99
xx.xx. *******
```

`xx:xx:00`	Time
`99`	Number of audio file
`xx.xx.`	Date
`*******`	Day of week: Monday–Sunday

Button function

◄►	Move between records
+	Add new record
–	Delete selected record
✔	Edit selected record
×	Return to channel selection

Button function in ‘item edit’ mode

◄►	Move between items
+ –	Switch flasing item (holding down the button will cycle through the options)
✔	Save edited record
×	Exit without save and return to list of records

Enter following data step-by-step.

6.5.2.1. Time

`hh:mm:ss`

If you enter the value `xx` in the time field (`hh:mm`), this position will always be considered valid.

- `xx:00:00` → the sequence will be active every full hour
- `10:xx:00` → the sequence will be active every full minute of the tenth hour

6.5.2.2. Switching Modes

`I`	Switch on
`O`	Switch off
`sxx`	Channel will be switched on for specific duration (01–99 s)

6.5.2.3. Date

`dd.mm.`	If you enter the value `xx` in the date field (`dd.mm.`), this position will always be considered valid. • `xx.04.` → the command will be executed every day in April • `25.xx.` → the command will be executed every on the 25 th of each month

6.5.2.4. Day of Week

Program execution is set in days of week in order Monday > Tuesday > Wednesday > Thursday > Friday > Saturday > Sunday

`*`	Day in which the program line will be executed
`–`	Day in which the program line will not be executed

6.5.2.5. Preparation of Audio Files

On your PC prepare audio files in format `.wav` with following parameters:

Audio channels	2
Resolution	16
Sampling rate	48 000 Hz
File name	Number `1` to `255` with file extension `.wav` (e.g. `25.wav`)

Place this prepared audio file on the USB Flash drive to its root directory.

6.6. Striking

This function is used to set up striking.

In `Main menu` press the ► button to select `Striking` and proceed to enter its setting by pressing ✔ button.

The menu contains two pages:

6.6.1. Classic Striking on the Bells or Dulcimers

This function is used to set the parameters and type of ringing on bells or dulcimers using electric bell strikers. Switching of electric hammers is realized by means of additional module HN…SSR2. **By default, striking is disabled.**

When activated, the display shows following:

```
Strike off22-05h
1/2 I02 P18 Ph10
```

`off22-05h`	Striking off period
`1/2`	Striking type
`I02`	Impulse length
`P18`	Gap length
`Ph10`	Gap length between 1/4 and hour striking at 1/4 striking type

Button function in ‘item edit’ mode

◄►	Move between items
+ –	Switch flasing item (holding down the button will cycle through the options)
✔	Save edited values and return to page view
×	Exit without save and return to page view

6.6.1.1. Striking Types

You can set following striking types:

`1/4`	Output 1 is always activated at the 15 th , 30 th , 45 th and 00 th minute Output 2 is activated at the full hour with the number of hour strikes
`1/2`	Output 1 is always activated on 30 th minute (1 strike) and on the full hour with the number of hour strikes
`1/1`	Output 1 is always activated at the full hour with the number of hour strikes
`1/0`	Output 1 is always activated at the full hour (1 strike)

Number of strikes / Output

Striking type	15 th minute	30 th minute	45 th minute	60 th minute	full hour
1/4 [1]	1 / OUT 1	2 / OUT 1	3 / OUT 1	4 / OUT 1	1–12 / OUT 2
1/2	–	1 / OUT 1	–		1–12 / OUT 1
1/1	–				1–12 / OUT 2
1/0	–			1 / OUT 1	–

1 When striking every quarter of an hour, it usually rings a quarter of an hour on bell with a higher tone and full hours on bell with a lower tone.

6.6.2. Audio Striking

This function is used to set the parameters and type of Audio striking on the audio output, it is available only for variant with audio output. During audio striking, the sound of bells (or dulcimers or other audio devices) from recordings stored on a connected USB Flash drive is played on the audio output.

When the function is activated, the weekly switching channel for audio output is locked. This channel cannot be unlocked while the audio striking functions is activated. By default, audio striking is disabled.

When activated, the display shows following:

```
Audio off 22-05h
1/2 Ph10
```

`22-05h`	Striking off period
`1/2`	Striking type
`Ph10`	Gap between 1/4 and hour striking at 1/4 striking type

Button function in ‘item edit’ mode

◄ ►	Move between items
+ −	Switch flasing item (holding down the button will cycle through the options)
✔	Save edited values and return to page view
✖	Exit without save and return to page view

If necessary, it is possible to prepare your own set of audio files with sounds as described below:

Audio channels	2
Resolution	16
Sampling rate	48 000 Hz
Required file name	File extensions `*.wav` • For striking at the 1/4 hour: `bell15.wav` • For striking at the 1/2 hour: `bell30.wav` • For striking at the 3/4 hour: `bell45.wav` • For striking at the full hour: `bell60.wav` • For striking number of full hours: `bellxh.wav` ,where `x` is the hour when the file is played (files must be prepared for all-day striking – `bell1h.wav` to `bell12h.wav`)

Audio files

Striking type	15 th minute	30 th minute	45 th minute	60 th minute	full hour
1/4	`bell15.wav`	`bell30.wav`	`bell45.wav`	`bell60.wav`	`bellxh.wav`
1/2	–	`bell30.wav`	–		`bellxh.wav`
1/1	–				`bellxh.wav`
1/0	–			`bell1h.wav`	–

Only one type of striking can be activated at a time. The active striking is then displayed in the information screens.

Button functions:

◄ ►	Switch between pages
✔	Enter item setting
✖	Return to `Main menu`

6.7. Load Channels

If the USB Flash drive is inserted into the USB connector, you are able to load prepared switching programs to Master clock. When loaded, the existing entries in the memory for all switching programs will be deleted.

Switching programs are generated from `Switch Editor Basic` software.

Place `hn60.swprog` file into root directory of USB Flash drive. Insert the USB Flash drive into the USB connector.

In `Main menu` press the ► button to select `Load channels` and proceed to enter its setting by pressing ✔ button.

The display shows the number of records found in the `hn60.swprog` file:

```
Save program   ?
Records:     005
```

Press the ✔ button. Then the switching channel will be loaded into the internal memory and the Master clock will be restarted. After rebooting, you can disconnect the USB Flash drive.

If the required file is not available, the display shows following:

```
Save program   ?
Records:     000
```

If you still press ✔ button, the display shows following:

```
Nothing to save
```

Button functions:

✔	Save channel records and reset the Master clock
✖	Exit without saving and return to `Main menu`

6.8. Output Blocking

This function is used to block the striking output.

The function is used if both striking and ringing are connected to the same bells or dulcimers (e.g. death knell). If the Master clock starts striking at the same time of ringing (movement of the bells), striking hammers or bells could be damaged.

The disabling blocking function is provided by the Master clock, which takes information about the movement of the bell from the connected external sensor. It must be positioned so that it can detect the movement of the bells (see Output Blocking chapter). As long as the bells are moving, the striking is blocked, then the blocking is extended by the time set on the first page of the menu.

In `Main menu` press the ► button to select `Blocking output` and proceed to enter its setting by pressing ✔ button.

The menu contains two pages:

Button functions:

◄►	Switch between pages
✔	Enter item setting on current page
✖	Return to `Main menu`

6.8.1. Setting of the Added Output Blocking Time

Setting the added output blocking time and activating the striking output function.

The display shows following:

```
Blocking time:10
chan:- strike: *
```

`Blocking time: 10`	Blocking time in [s]
`chan:-`	Activation of the channel blocking (not yet implemented)
`strike: *`	Blocking activation for striking on bells

6.8.1.1. Blocking Time

You can set blocking time:

`Blocking time (00–99)`	Enter blocking type in range 00–99 (default 10 s)

6.8.1.2. Blocking on / off

You can set if the blocking is on or off:

`-`	Blocking off (default)
`*`	Blocking on

6.8.2. Selection of Control Contact Type

The display shows following:

```
Polarity: NO
```

Button function in ‘item edit’ mode

◄►	Move between items
+ –	Switch flasing item (holding down the button will cycle through the options)
✔	Save edited values and return to page view
×	Exit without save and return to page view

6.8.2.1. Polarity

NC	Sensor is closed when the bell is not moving (normally close)
NO	Sensor is closed when the bell is moving (normally open)

7 Service Menu

Entry into service menu only for service purposes!

On screen VERSION press the ✔ button to enter the service menu.

The display shows following:

```
Service menu
Current limits
```

Options

`Current limits`	Setting of current limits for outputs, see Current Limits chapter
`Line parameters`	Setting parameters of impulse slave, see Line Parameters chapter
`Language`	Setting of language, see Language chapter
`Week correction`	Setting of week correction, see Week Correction chapter
`Delete memory`	Invoke default settings, see Delete Memory chapter
`Firmware update`	Invoke firmware update, see Firmware Update chapter

This setting is available only when the USB flash drive is connected to the USB connector.

Button function

◄ ►	Switch between pages
✔	Enter item setting
✖	Return to screen VERSION

7.1. Current Limits

Setting of current limits for outputs.

In `Service menu` press the ► button to select `Current limits` and proceed to enter its setting by pressing ✔ button.

The display shows following:

```
L1:  150  DC: 50
Accu: 50 A: 0.1W
```

`L1:  150`	Current limit for slave line (current, which is reached, master clock reports overload state)
`DC: 50`	Current limit for 24 V output
`Accu: 50`	Current limit for Accu (14 V) output
`A: 0.1W`	Available power in Watts, which can be distributed into ouputs (cannot be set)

The current limits are in mA.

Summary available power (`A:`) is calculated by formula:

$$P[W] = 8.3 - Accu[A] \times 14 + (Line[A] + DC[A]) \times 25$$

Button function

✔	Enter item setting
✖	Return to `Service menu`

Button function in ‘item edit’ mode

◄►	Move between items
+ –	Switch flasing item (holding down the button will cycle through the options)
✔	Save edited values and return to page view
✖	Exit without save and return to page view

After setting desired current limits, press the ✔ button to confirm your choice. The display shows `Saved` and returns to page view.

7.1.1. Default Values

Slave line	`L1: 150` [mA]
Output 24V	`DC: 70` [mA]
Output 14V	`Accu: 200` [mA]

7.1.2. Limits for Outputs

Slave line	`L1: 150` [mA]
Output 24V	`DC: 200` [mA]
Output 14V	`Accu: 200` [mA]

7.2. Line Parameters

Setting parameters of impulse slave.

In `Service menu` press the ► button to select `Line parameters` and proceed to enter its setting by pressing ✔ button. The display shows following:

```
Vtg level:  24 V
Bipolar       L1
```

`Vtg level: 24 V`	Voltage level
`Bipolar`	Polarity
`L1`	Set line

Button function

✔	Enter item setting
✖	Return to `Service menu`

Button function in 'item edit' mode

◄►	Move between items
+ –	Switch flasing item (holding down the button will cycle through the options)
✔	Save edited values and return to page view
✖	Exit without save and return to page view

After setting desired line parameters, press the ✔ button to confirm your choice. The display shows `Saved` and returns to page view.

7.2.1. Default Values

Voltage level	`Vtg level: 24 V`
Polarity	`Bipolar`

7.2.2. Available Values

Voltage level

- `24 V`
- `12 V`

Polarity

- `Bipolar` – polarity of impulses is changed
- `Unipolar` – polarity of impulses is not changed

7.3. Language

In this menu you can change the HN 60.R Master clock language.

In `Service menu` press the ► button to select `Language` and proceed to enter its setting by pressing ✔ button.

The display shows following:

```
Language
English
```

Button function

◄►	Switch flasing item (holding down the button will cycle through the options)
+ –	Switch flasing item (holding down the button will cycle through the options)
✔	Save entered value and return to `Service menu`
✖	Exit without save and return to `Service menu`

After selecting desired language, press the ✔ button to confirm your choice. The display shows `Saved` and returns to `Service menu` .

7.3.1. Available Languages

- `English`
- `Czech`
- `German`

7.4. Week Correction

In `Service menu` press the ► button to select `Week correction` and proceed to enter its setting by pressing ✔ button. The display shows following:

```
Week correction
+00.0 sec
```

`+00.0 sec`	Manual correction of timebase in seconds per week Available range: `-99.9 sec` to `+99.9 sec` Default: `+00.0 sec`

Button function

◄►	Move between items
+ −	Switch flasing item (holding down the button will cycle through the options)
✔	Save edited values and return to `Service menu`
×	Return to `Service menu`

After setting desired week correction, press the ✔ button to confirm your choice. The display shows `Saved` and returns to `Service menu` .

7.5. Delete Memory

In `Service menu` press the ► button to select `Delete memory` and proceed to enter its setting by pressing ✔ button.
The display shows following:

```
Delete memory
Default settings
```

◄►	Change flashing item
✔	Confirm memory deletion
✖	Exit without save and return to `Service menu`

7.5.1. Available Options

`Default settings`	Delete memory of whole HN 60.R Master clock
`Week program`	Delete week program records

If you select `Default settings` option, it need additional confirmation:

The display shows following:

```
Default setting:
No
```

Press the + to switch the flashing item to `Yes` and press ✔ to invoke default settings. The HN 60.R will then resets and the screen MASTER is displayed.

7.6. Firmware Update

This setting is available only when the USB flash drive is connected to the USB connector.

Navigate to the url https://docs.mobatime.cloud/HN-60.R/firmware to download the latest firmware file – version `v1.4.0` .

Place the file `hn60.enf` into root directory of USB flash drive. Insert the USB flash drive into USB connector. In `Service menu` press the ► button to select `Firmware update` and proceed to run the firmware update process by pressing ✔ button.
The display shows following:

```
Firmware update
100 %  Running
```

On the display is displayed progress of the firmware update and update state. Update progress is displayed in percentage value. Update state is in form of text.

Available text fields:

`Error`	On the USB flash drive is not detected correct file (either the file is not present or the file is for other type of master clock)
`Running`	Update process in progress
`Reset`	Waiting for the master clock update

During the update process, **do not touch** any buttons.

During the update process, **do not disconnect** the USB flash drive.

After the update process ends, the master clock restarts and return to screen MASTER. Then it is possible to check on the screen VERSION if the firmware version is correct. If not, repeat the whole procedure.

8 Technical Data

8.1. Basic Data

Mouting	
Rack height	1U

Slave clock line	
Number of slave clock lines	1
Types	Polarized minute / half-minute / second impulses MOBATIME serial code MOBALine
Electrical parameters	12 / 24 V, max. 150 mA

Switching relay contact	
Number of switching relay contacts	2
Weekly program	With up to 399 switching contacts
Astronomical calendar	With entry of geographical coordinates for surise / sunset calculation
Manual switching	Selection of different control modes
Electrical parameters	Max. 250 VAC, max. 6 A, 1500 VA

Other I/O	
Input of DCF signal	✓
Output of DCF signal (synthetic passive)	✓
USB for recording / playback of switching programs	✓
Mono audio, output 3.5 mm jack	2 outputs (1 on rear side / 1 on front panel)
Output for battery charging	14 VDC, max. 200 mA
Output VDC	24 VDC, max. 200 mA

Back-up at Power Loss	
Passive for RTC	About 5 years by lithium battery
Active for full functionality	Internal circuit for charging the external battery

Power Supply	
AC (mains)	115 or 230 VAC ±5 %, 50–60 Hz
DC	24 VDC ±5 %; 13 VDC ±10 %

Accuracy (at approx. 20 °C)	
Without synchronization	±0.1 s/day (after 24 hours of synchronization at constant temperature)
With synchronization	± 10 ms

Operating environment	
Operating temperature	-30 to +70 °C
Relative humidity	Max. 95 % (without condensing)
Protection degree	IP 40

Weight	
Standard	1.5 kg

Dimensions	
Standard	483 × 44 × 127 mm

8.2. Power Supply – Parameters and Options

Power source [1]	**230 VAC ± 10 %**	**24 VDC ± 5 %**	**13 VDC ± 10 %**
Power supply terminal	L N PE	VDC	
Voltage at the ACCU terminal	14 VDC		–
Max. possible current consumption from ACCU terminal [2]	200 mA		–
Voltage at the VDC terminal	24 VDC	–	24 VDC
Max. possible current consumption from VDC terminal [2]	200 mA	–	200 mA
Impulse line voltage [3]	12 / 24 V		
Active operation reserve (Pb accumulator)	✓	–	
Fitted jumper ACCU connect [4]	–		✓
Voltage type	AC voltage, sine 50–60 Hz	DC voltage, stabilized and smoothed	

1 If the tolerance of the supplied supply voltage is not observed, or if another type of voltage is used, the correct operation of Master clock cannot be guaranteed.

2 The total power supplied to the connected equipment consists of consumption of the secondary line, consumption at the ACCU and VDC terminals; the maximum values of the specified currents cannot be supplied to the load at the same time.

3 Default value 24 V.12 V can be selected in the service menu.

4 If the Master clock is powered though +ACCU– connector from a permanent 12–14 VDC power supply, the “Accu connect” jumper needs to be installed.

Do not install the jumper if the Master clock is powered by mains 230 VAC (115 VAC) and equipped with an active battery back-up (12 V accumulator connected to +ACCU–).

In case of no mains power is available and Master clock should be switched on, the “Accu connect” jumper can be set temporarily and when an external 12 V accumulator is connected to +ACCU– connector, the Master clock will start up. Once the Master clock is started, the jumper should be removed.

9 Time Zones Table

Time zones are a system of dividing the Earth's surface into regions, each with its own unique time offset from UTC (Coordinated Universal Time) or GMT (Greenwich Mean Time) and which may have different rules for change seasonal time. This division allows for consistent and synchronized timekeeping across the globe.

No.	City / State	UTC Offset	DST	Standard → DST	DST → Standard
00	UTC GMT, Monrovia, Casablanca	0	No		
01	London, Dublin, Edinburgh, Lisbon	0	Yes	last Sunday March (01:00)	last Sunday October (02:00)
02	Brussels, Amsterdam, Berlin, Bern, Copenhagen, Madrid, Oslo, Paris, Rome, Stockholm, Vienna, Belgrade, Bratislava, Prague, Budapest, Ljubljana, Sarajevo, Sofia, Vilnius, Warsaw, Zagreb	+1	Yes	last Sunday March (02:00)	last Sunday October (03:00)
03	Athens, Helsinky, Riga, Tallinn	+2	Yes	last Sunday March (03:00)	last Sunday October (04:00)
04	Bucharest	+2	Yes	last Sunday March (03:00)	last Sunday October (04:00)
05	Pretoria, Harare, Kaliningrad	+2	No		
06	Amman	+2	Yes	last Thurdays March (23:59)	last Friday October (01:00)
07	UTC (GMT)	0	No		
08	Istanbul, Kuwait City, Minsk, Moscow, Saint Petersburg, Volgograd	+3	No		
09	Praia, Cape Verde	-1	No		
10	UTC (GMT)	0	No		
11	Abu Dhabi, Muscat, Tbilisi, Samara	+4	No		
12	Kabul	+4.5	No		
13	Adamstown (Pitcairn Is.)	-8	No		
14	Tashkent, Islamabad, Karachi, Yekaterinburg	+5	No		
15	Mumbai, Kolkata, Chennai, New Delhi, Colombo	+5.5	No		
16	Astana, Thimphu, Dhaka, Novosibirsk	+6	No		
17	Bangkok, Hanoi, Jakarta, Krasnoyarsk	+7	No		
18	Beijing, Hong Kong, Singapore, Taiper, Irkutsk	+8	No		
19	Tokyo, Seoul, Yakutsk	+9	No		
20	Gambier Island	-9	No		
21	South Australia: Adelaide	+9.5	No		
22	Northern Territory: Darwin	+9.5	No		

No.	City / State	UTC Offset	DST	Standard → DST	DST → Standard
23	Brisbane, Guam, Port Moresby, Vladivostok	+10	No		
24	Sydney, Canberra, Melbourne, Tasmania: Hobart	+10	Yes	1 st Sunday October (02:00)	1 st Sunday April (03:00)
25	UTC (GMT)	0	No		
26	UTC (GMT)	0	No		
27	Honiara (Solomon Is.), Magadan, Noumea (New Caledonia)	+11	No		
28	Auckland, Wellington	+12	Yes	last Sunday September (02:00)	1 st Sunday April (03:00)
29	Majuro (Marshall Is.), Anadyr	+12	No		
30	Azores	-1	Yes	last Sunday March (00:00)	last Sunday October (01:00)
31	Middle Atlantic	-2	No		
32	Brasilia	-3	Yes	3 rd Sunday October (00:00)	3 rd Sunday February (00:00)
33	Buenos Aires	-3	No		
34	Newfoundland	-3.5	Yes	2 nd Sunday March (02:00)	1 st Sunday November (02:00)
35	Atlantic Time (Canada)	-4	Yes	2 nd Sunday March (02:00)	1 st Sunday November (02:00)
36	La Paz	-4	No		
37	Bogota, Lima, Quito	-5	No		
38	New York, Eastern Time (US & Canada)	-5	Yes	2 nd Sunday March (02:00)	1 st Sunday November (02:00)
39	Chicago, Central Time (US & Canada)	-6	Yes	2 nd Sunday March (02:00)	1 st Sunday November (02:00)
40	Tegucigalpa, Honduras	-6	No		
41	Phoenix, Arizona	-7	No		
42	Denver, Mountain Time	-7	Yes	2 nd Sunday March (02:00)	1 st Sunday November (02:00)
43	Los Angeles, Pacific Time	-8	Yes	2 nd Sunday March (02:00)	1 st Sunday November (02:00)
44	Anchorage, Alaska (US)	-9	Yes	2 nd Sunday March (02:00)	1 st Sunday November (02:00)
45	Honolulu, Hawaii (US)	-10	No		
46	Midway Is. (US)	-11	No		
47	Mexico City, Mexico	-6	Yes	1 st Sunday April (02:00)	last Sunday October (02:00)

No.	City / State	UTC Offset	DST	Standard → DST	DST → Standard
48	Adak (Aletuian Is.)	-10	Yes	2 nd Sunday March (02:00)	1 st Sunday November (02:00)
49	UTC (GMT)	0	No		
50	UTC (GMT)	0	No		
51	UTC (GMT)	0	No		
52	UTC (GMT)	0	No		
53	UTC (GMT)	0	No		
54	Ittoqqortoormiit, Greenland	-1	Yes	last Sunday March (00:00)	last Sunday October (01:00)
55	Nuuk, Qaanaaq, Greenland	-3	Yes	last Saturday March (22:00)	last Saturday October (23:00)
56	Myanmar	+6.5	No		
57	Western Australia: Perth	+8	No		
58	Caracas	-4.5	No		
59	CET standard time	+1	No		
60	not used				
61	not used				
62	Baku	+4	Yes	last Sunday March (04:00)	last Sunday October (05:00)
63	UTC (GMT)	0	No		
64	UTC (GMT)	0	No		

Legend

UTC	Coordinated Universal Time
UTC Offset	Time difference from UTC time
DST	Daylight Saving Time
Standard → DST	Time change from Standard (Winter) Time to Summer Time
DST → Standard	Time change from Summer Time to Standard (Winter Time)

2nd last Sunday March (02:00)
↓
switch over on the penultimate Sunday in March at 02:00 hours local time

Headquarters/Production *Sales Worldwide*	Tel. +41 34 432 46 46 | Fax +41 34 432 46 99 moserbaer@mobatime.com | www.mobatime.com
Sales Switzerland	MOBATIME AG | Stettbachstrasse 5 | CH-8600 Dübendorf Tel. +41 44 802 75 75 | Fax +41 44 802 75 65 info-d@mobatime.ch | www.mobatime.ch MOBATIME SA | En Budron H 20 | CH-1052 Le Mont-sur-Lausanne Tél. +41 21 654 33 50 | Fax +41 21 654 33 69 info-f@mobatime.ch | www.mobatime.ch
Sales Germany/Austria	BÜRK MOBATIME GmbH Postfach 3760 | D-78026 VS-Schwenningen Steinkirchring 46 | D-78056 VS-Schwenningen Tel. +49 7720 / 85 35 - 0 | Fax +49 7720 / 85 35 - 11 buerk@buerk-mobatime.de | www.buerk-mobatime.de